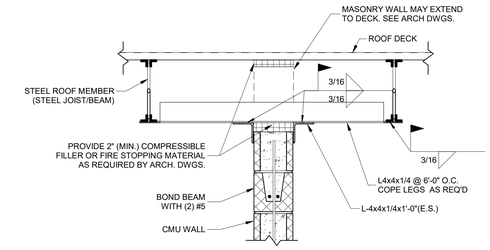

TYPICAL TOP OF NON-BEARING CMU WALL ATTACHMENT TO STEEL DETAIL - WALL PARALLEL TO MEMBER

5 SCALE: NTS

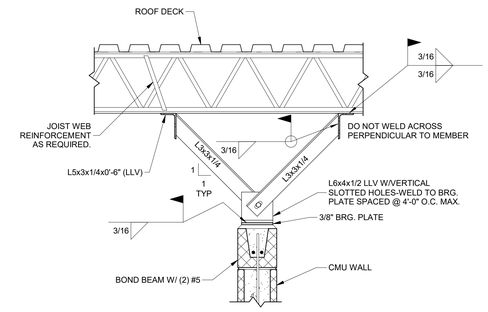

TYPICAL TOP OF NON-BEARING CMU WALL ATTACHMENT TO STEEL DETAIL - WALL NOT EXTENDED TO THE UNDERSIDE OF DECK

4 SCALE: NTS

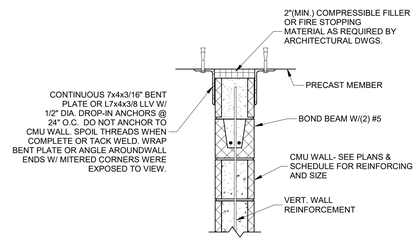

TYPICAL TOP OF NON-BEARING CMU WALL ATTACHMENT TO PRECAST DETAIL

3 SCALE: NTS

A1

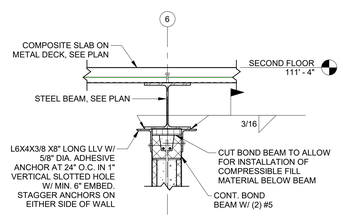

SECTION

7 SCALE: 3/4" = 1'-0"

TYPICAL TOP OF NON-BEARING CMU WALL ATTACHMENT TO STEEL DETAIL - WALL PERP. TO MEMBER

2 SCALE: NTS

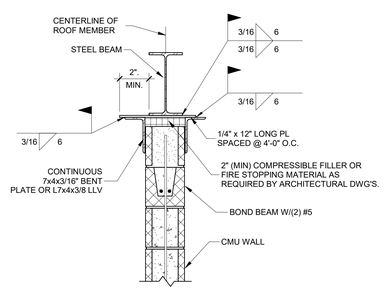

NOTE:
1. WALL AND MEMBER CENTER LINE MAY BE OFFSET 8" MAX.

TYPICAL TOP OF NON-BEARING CMU WALL ATTACHMENT TO STEEL DETAIL - WALL PARALLEL TO UNDERSIDE OF MEMBER

6 SCALE: NTS

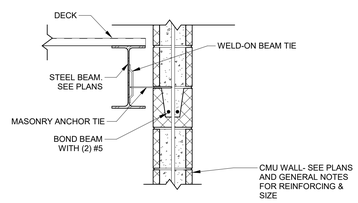

TYPICAL TOP OF NON-LOAD BEARING CMU WALL BRACE TO STEEL MEMBER DETAIL - WALL PARALELL AND BESIDE STEEL EDGE MEMBER

1 SCALE: NTS

DLZ
ARCHITECTURE • ENGINEERING • PLANNING
SURVEYING • CONSTRUCTION SERVICES
DLZ INDIANA, LLC

2020/01/20
ELLIOT G. ALLEN
CERTIFICATE
No. 10400295
STATE OF INDIANA

NO.	REVISION	DATE
A1	ADDENDUM 1	01/20/22

DRAWN: KJJ
DESIGNED: KJJ
APPRV'D: EGA
CHK'D: EGA
DATE: DECEMBER 20, 2021

PROJECT NUMBER
2063-1048-90

SULLIVAN COUNTY SHERIFF'S OFFICE AND CORRECTIONAL FACILITY
2357 NORTH SECTION STREET SULLIVAN, INDIANA 47882

TYPICAL MASONRY DETAILS & SECTIONS

DRAWING NUMBER
S4.1

STRUCTURAL

C:\Revit\Backups\2020\2063-1048-90 Sullivan County Jail - Struct_kjackowski\H3YGV.rvt
1/20/2022 8:37:57 AM