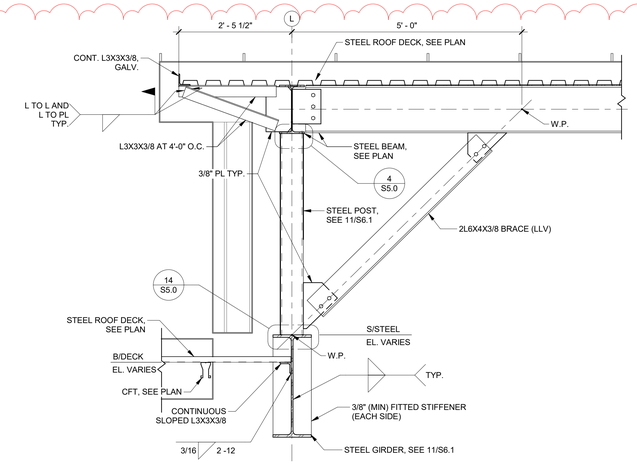

16 **SECTION**
SCALE: 3/4" = 1'-0"

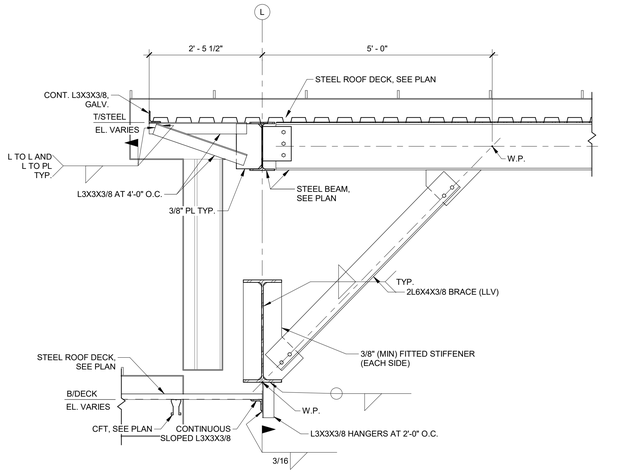

15 **SECTION**
SCALE: 3/4" = 1'-0"

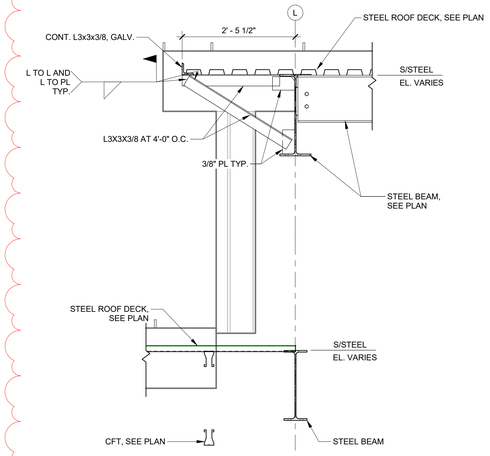

14 **SECTION**
SCALE: 3/4" = 1'-0"

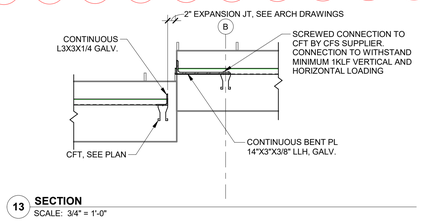

13 **SECTION**
SCALE: 3/4" = 1'-0"

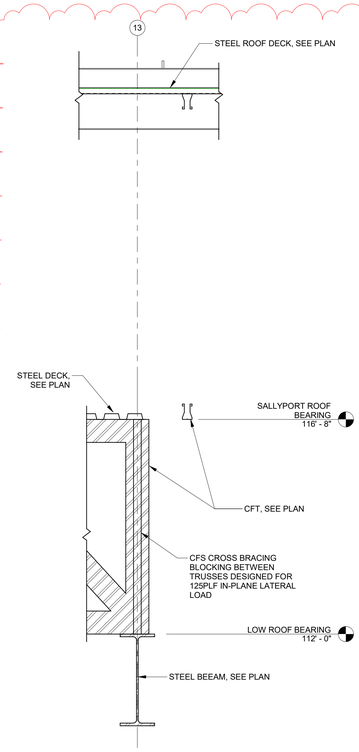

12 **SECTION**
SCALE: 3/4" = 1'-0"

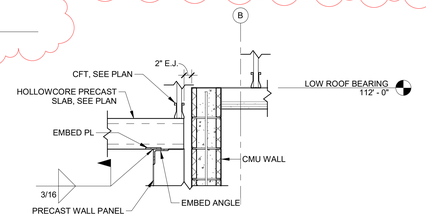

11 **SECTION**
SCALE: 3/4" = 1'-0"

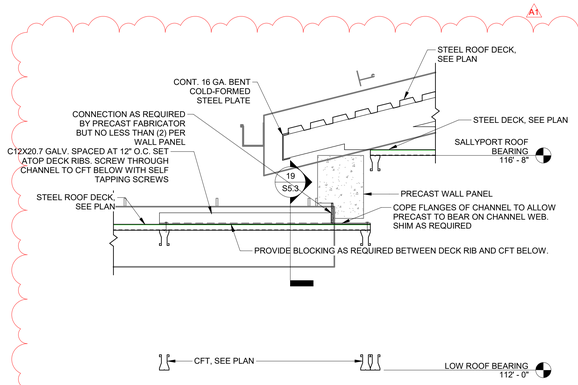

10 **SECTION**
SCALE: 3/4" = 1'-0"

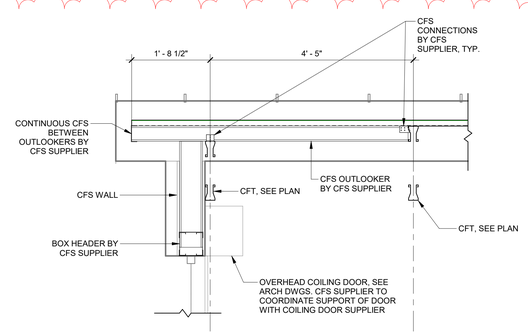

9 **SECTION**
SCALE: 3/4" = 1'-0"

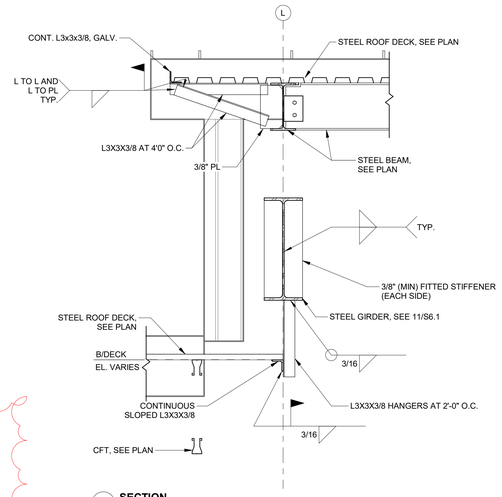

8 **SECTION**
SCALE: 3/4" = 1'-0"

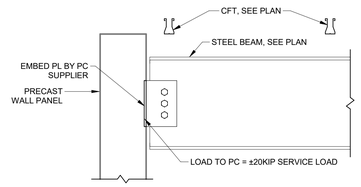

7 **SECTION**
SCALE: 3/4" = 1'-0"

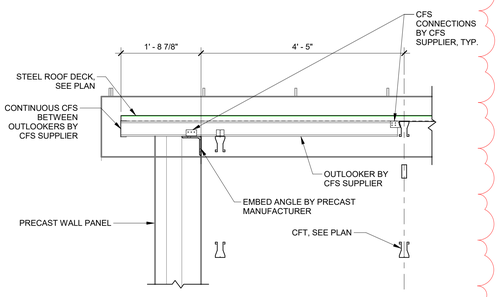

6 **SECTION**
SCALE: 3/4" = 1'-0"

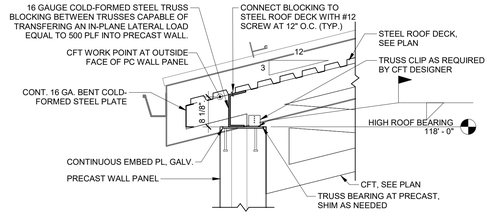

5 **SECTION**
SCALE: 3/4" = 1'-0"

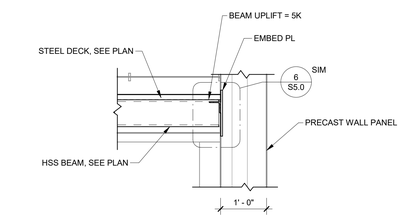

4 **SECTION**
SCALE: 3/4" = 1'-0"

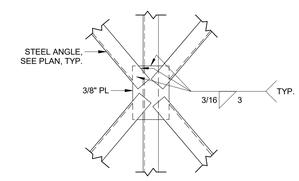

3 **DETAIL**
SCALE: 3/4" = 1'-0"

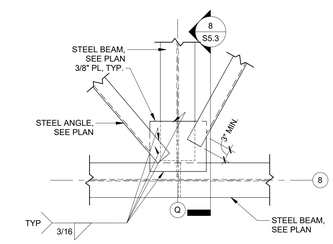

2 **DETAIL**
SCALE: 3/4" = 1'-0"

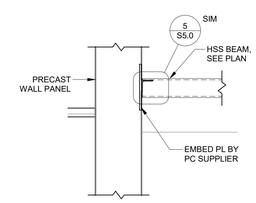

1 **SECTION**
SCALE: 3/4" = 1'-0"

DLZ
ARCHITECTURE • ENGINEERING • PLANNING
SURVEYING • CONSTRUCTION SERVICES
DLZ INDIANA, LLC

NO.	REVISION	DATE
A1	ADDENDUM 1	01/20/22

DRAWN: KJJ CHK'D: EGA
DESIGNED: KJJ
APPRV'D: EGA
DATE: DECEMBER 20, 2021

PROJECT NUMBER 2063-1048-90

SULLIVAN COUNTY SHERIFF'S OFFICE AND CORRECTIONAL FACILITY
2357 NORTH SECTION STREET SULLIVAN, INDIANA 47882

FRAMING DETAILS & SECTIONS - 3

DRAWING NUMBER
S5.4

STRUCTURAL

C:\RevitBackups\2020\2063-1048-90 Sullivan County Jail - Struct_kjackowski43YGV.rvt
1/20/2022 9:18:50 AM