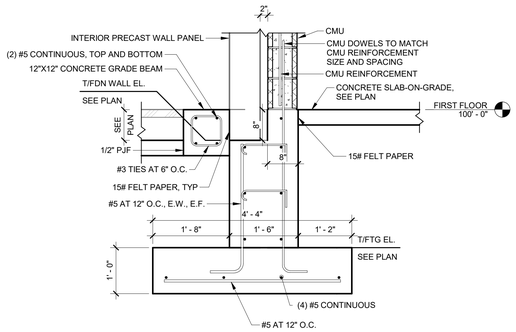

12 **SECTION**
SCALE: 3/4" = 1'-0"

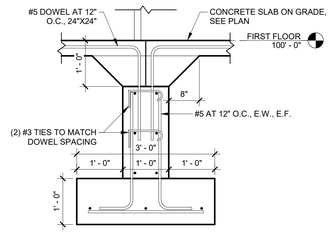

8 **SECTION**
SCALE: 3/4" = 1'-0"

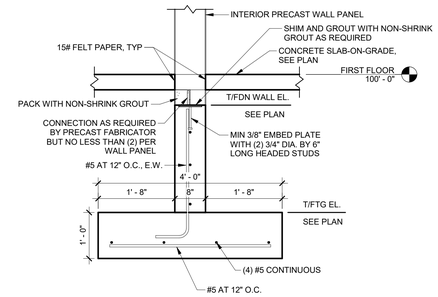

4 **TYPICAL INTERIOR PRECAST WALL FOUNDATION**
SCALE: 3/4" = 1'-0"

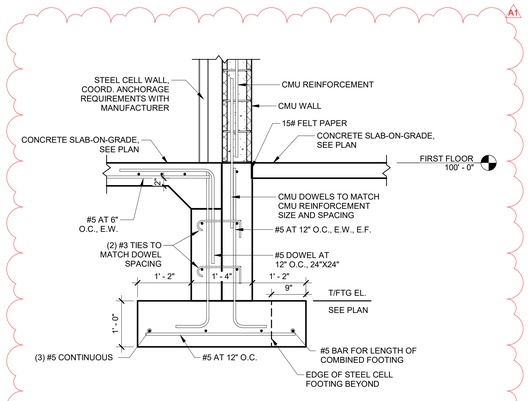

15 **SECTION**
SCALE: 3/4" = 1'-0"

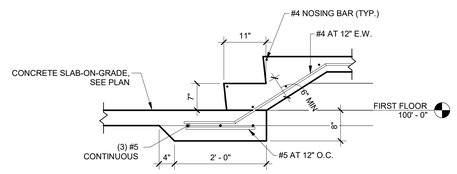

11 **SECTION**
SCALE: 3/4" = 1'-0"

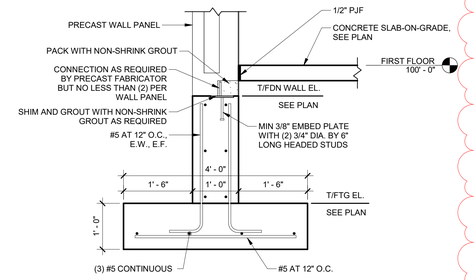

7 **TYPICAL EXTERIOR PRECAST WALL FOUNDATION - TYPE 2**
SCALE: 3/4" = 1'-0"

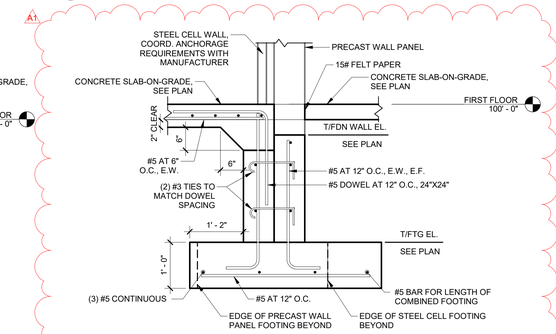

3 **PRECAST WALL PANEL FOUNDATION ADJACENT TO STEEL CELL FOUNDATION**
SCALE: 3/4" = 1'-0"

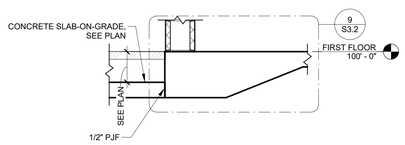

14 **SECTION**
SCALE: 3/4" = 1'-0"

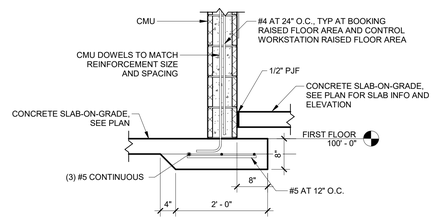

10 **SECTION**
SCALE: 3/4" = 1'-0"

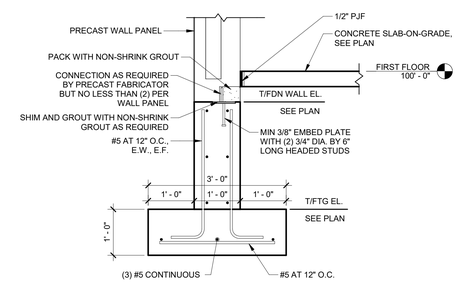

6 **TYPICAL EXTERIOR PRECAST WALL FOUNDATION - TYPE 1**
SCALE: 3/4" = 1'-0"

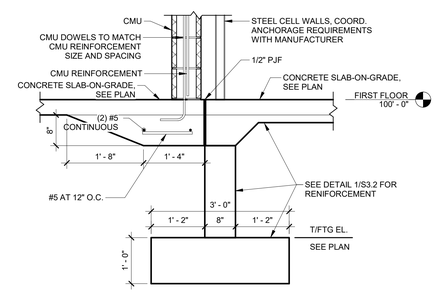

2 **SECTION**
SCALE: 3/4" = 1'-0"

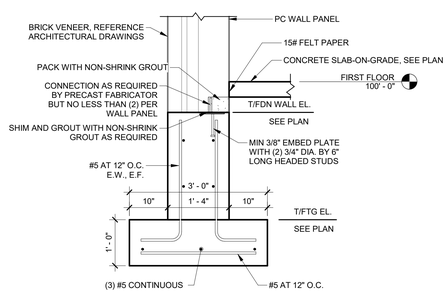

13 **SECTION**
SCALE: 3/4" = 1'-0"

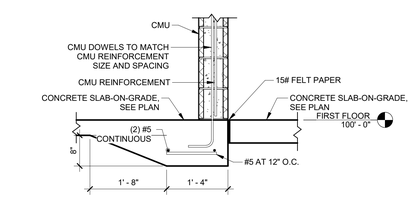

9 **THICKENED SLAB EDGE SUPPORTING CMU**
SCALE: 3/4" = 1'-0"

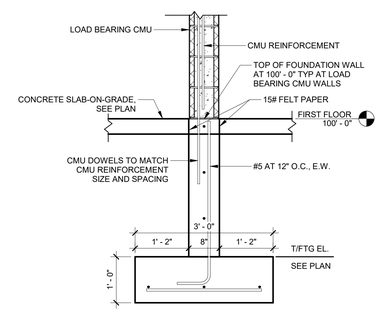

5 **TYPICAL LOAD BEARING CMU FOUNDATION**
SCALE: 3/4" = 1'-0"

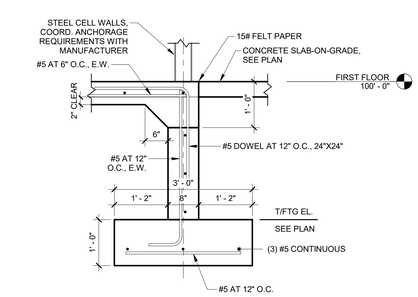

1 **TYPICAL FOUNDATION WALL UNDER STEEL CELLS**
SCALE: 3/4" = 1'-0"

DLZ
ARCHITECTURE • ENGINEERING • PLANNING
SURVEYING • CONSTRUCTION SERVICES
DLZ INDIANA, LLC

NO.	REVISION	DATE
A1	ADDENDUM 1	01/20/22

DRAWN: KJJ CHK'D: EGA
DESIGNED: KJJ
APPRV'D: EGA
DATE: DECEMBER 20, 2021

PROJECT NUMBER
2063-1048-90

SULLIVAN COUNTY SHERIFF'S OFFICE AND CORRECTIONAL FACILITY
2357 NORTH SECTION STREET SULLIVAN, INDIANA 47882

FOUNDATION DETAILS & SECTIONS

DRAWING NUMBER
S3.2

STRUCTURAL

C:\RevitBackups\2020\2063-1048-90 Sullivan County Jail - Struct_kjackowskiH3YGV.rvt
1/19/2022 1:42:54 PM