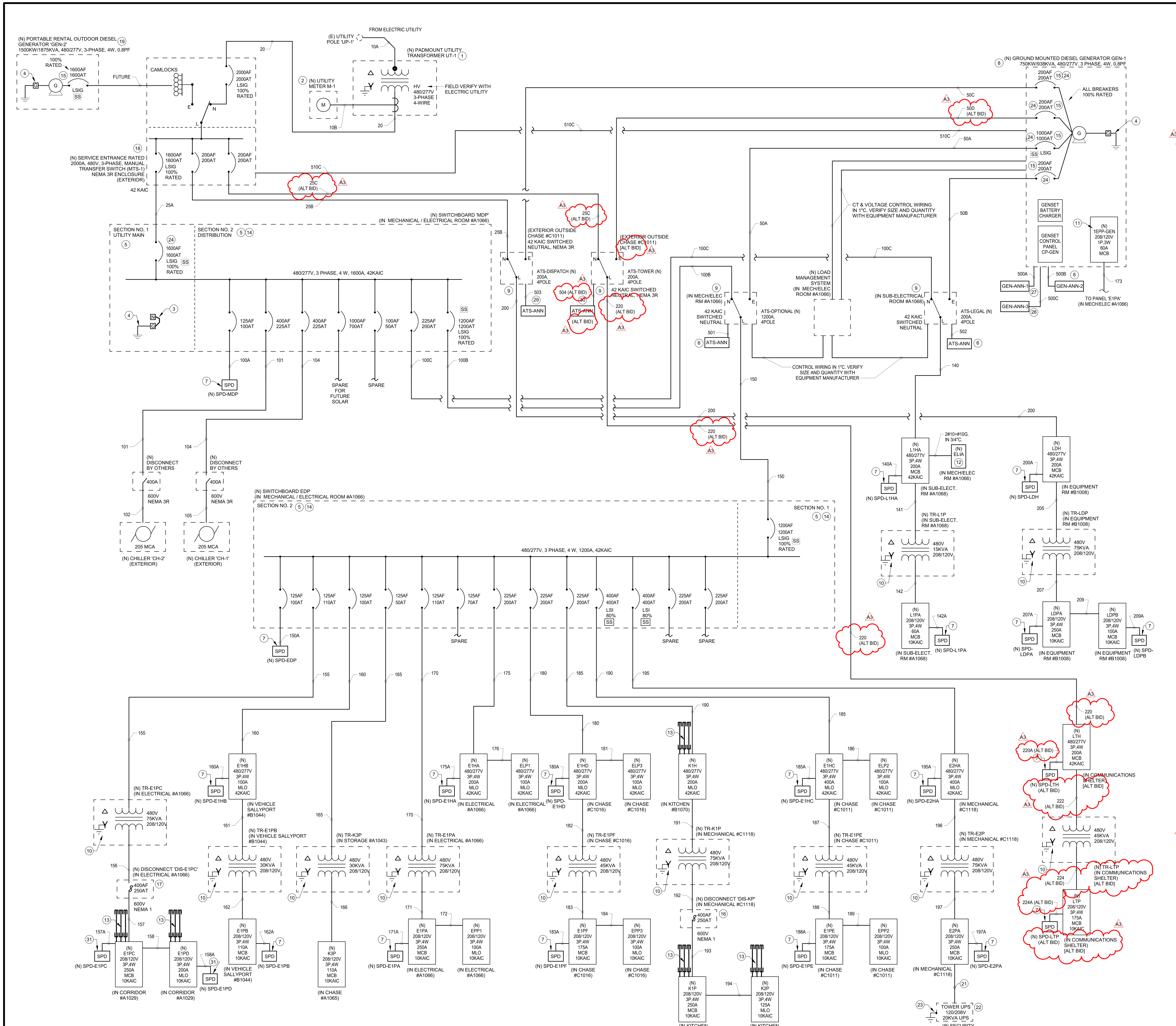

1 **ONE-LINE DIAGRAM**
SCALE: N.T.S.

GENERAL NOTES

A. FOR PANELBOARD SCHEDULES, SEE DRAWINGS E6.4, THROUGH E6.8.

B. FOR CONDUIT AND CABLE SCHEDULES, SEE DRAWING E7.2.

C. FOR SERVICE ENTRANCE GROUNDING ELECTRODE SYSTEM DETAIL, SEE DETAIL #1 ON DRAWING E8.3.

D. REFERENCE MECHANICAL EQUIPMENT ELECTRICAL CONNECTION SCHEDULES, ON DRAWING E6.2.

E. FOR TRANSFORMER SCHEDULE, SEE DRAWING E6.3.

F. BREAKERS INDICATED ARE 80% RATED, THERMAL MAGNETIC, MOLDED CASE U.O.N.

G. REFER TO DRAWING E8.6, DETAIL #5 FOR DETAILED NOTES FOR ELECTRONICALLY OPERATED BREAKER PANELBOARD NETWORK REQUIREMENTS FOR PANELBOARDS 'EPP1', 'EPP2', 'EPP3', 'ELP1', 'ELP2', AND 'ELP3'.

H. REFER TO SPECIFICATION 012300 FOR ALTERNATE BID INFORMATION. (A3)

KEYNOTES (#)

1. UTILITY TRANSFORMER FURNISHED AND INSTALLED BY DUKE ENERGEY, CONCRETE PAD FURNISHED AND INSTALLED BY CONTRACTOR IN ACCORDANCE WITH THE ELECTRIC UTILITY'S STANDARDS.
2. METER CABINET FURNISHED AND INSTALLED BY CONTRACTOR. FIELD COORDINATE CABINET REQUIREMENTS WITH DUKE ENERGY. METER BASE FURNISHED AND INSTALL BY DUKE ENERGY.
3. EQUIP SWITCGEAR 'MDP' WITH REMOVABLE NEUTRAL LINK.
4. FOR SERVICE ENTRANCE GROUNDING ELECTRODE SYSTEM DETAIL, SEE DRAWING E8.3, DETAIL #1. ALSO, REFER TO DETAIL #7 ON DRAWING E8.3 FOR SERVICE ENTRANCE GROUNDING SCHEME.
5. SECTION SHALL BE SWITCHBOARD CONSTRUCTION. REFER TO SPECIFICATION 262413 FOR DETAILED EQUIPMENT REQUIREMENTS.
6. ANNUNCIATOR 'GAAP-2' LOCATED IN WORK #C2003.
7. REMOTE SURGE PROTECTIVE DEVICE (SPD). REFER TO SPECIFICATION 264313 FOR DETAILED EQUIPMENT REQUIREMENTS. PROVIDE A MAXIMUM LENGTH OF 6' OF CONDUCTORS TO SPD.
8. DIESEL ENGINE GENERATOR WITH NON-WALK-IN LEVEL 1 SOUND ENCLOSURE AND 72 HOUR DOUBLE WALL FUEL TANK. REFER TO SPECIFICATION 263213 FOR DETAILED EQUIPMENT REQUIREMENTS.
9. AUTOMATIC TRANSFER SWITCH WITH SWITCHED NEUTRAL AND MAINTENANCE BYPASS. REFER TO SPECIFICATION 263600 FOR DETAILED EQUIPMENT REQUIREMENTS.
10. FOR TRANSFORMER GROUNDING DETAIL, SEE DETAIL #6 ON SHEET E-803. (TYPICAL FOR ALL TRANFORMERS). REFER TO SPECIFICATIONS FOR DETAILED EQUIPMENT REQUIREMENTS.
11. PANEL, 120/208V, 1-PHASE, 3-WIRE FOR GENSET CHARGERS, HEATERS, LIGHTS AND RECEPTACLES. PANEL PROVIDED AND PRE-WIRED BY GENERATOR MANUFACTURER.
12. FURNISH AND INSTALL CENTRAL UNINTERRUPTIBLE EMERGENCY LIGHTING INVERTER, SINGLE PHASE, 277V INPUT/OUTPUT WITH 4 OUTPUT BREAKERS, 90-MINUTE RATED BATTERY BACKUP CAPACITY AT RATED LOAD, UL 924 LISTED, 4.2KW MINIMUM FOR EL1A, CONTROLLED POWER MODEL ELU OR APPROVED EQUAL BY MYERS, DUAL-LITE, EATON.
13. FURNISH AND INSTALL (3) EMPTY 1" CONDUITS STUBBED OUT ABOVE ACCESSIBLE CEILING FOR FUTURE USE. CAP THE END OF THE CONDUIT LOCATED IN CEILING.
14. SWITCHBOARD FEEDER BREAKER DISTRIBUTION SECTION TO BE PROVIDED WITH A MINIMUM OF 60" MOUNTING SPACE.
15. BREAKER SHALL BE SERVICE ENTRANCE RATED.
16. FURNISH AND INSTALL 600VAC, 3-POLE, 400A HEAVY DUTY FUSED SAFETY DISCONNECT SWITCH 'DIS-KP' IN NEMA 1 ENCLOSURE, FUSE AT 250A. REFER TO DRAWING E2.2C FOR LOCATION.
17. FURNISH AND INSTALL 600VAC, 3-POLE, 400A HEAVY DUTY FUSED SAFETY DISCONNECT SWITCH 'DIS-E1PC' IN NEMA 1 ENCLOSURE, FUSE AT 250A. REFER TO DRAWING E2.3, DETAIL #4 FOR LOCATION.
18. 2000A, 480V/277V, 3-PHASE, 4-WIRE, 4-POLE SERVICE ENTRANCE MANUAL TRANSFER SWITCH IN NEMA 3R ALUMINUM SECURE DOUBLE DOOR ENCLOSURE WITH INTEGRATED QUICK CONNECTS & LUGS FOR TEMPORARY GENERATOR CONNECTION; MFR/MODEL: ASCO 300 SERIES #GO3MUQA32000NOXM,44G,170EP1-L, POWERTEMP OR APPROVED EQUAL. PROVIDE WITH THERMOSTAT CONTROLLED STRIP HEATER AND AUXILLIARY CONTACT SETS TO INDICATE SWITCH POSITION AND LED INDICATION ON PANEL (SOURCE 1, OFF, AND SOURCE 2, PHASE ROTATION, ENGINE START/TEST SWITCH WITH COMMON ALARM INPUT/LED/CONACT AND I/O MODULE). PROVIDE WITH 30A BLOCK HEATER RECEPTACLE AND 20A BATTERY CHARGER RECEPTACLE.
19. FUTURE PORTABLE GENERATOR BY OWNER TO PROVIDE BACK-UP BUILDING COOLING.
20. PORTABLE GENERATOR CABLES WITH CAM-LOK CONNECTIONS (BY OWNER OR BY PORTABLE GENSET VENDOR UNDER SEPARATE OWNER CONTRACT).
21. FOR FEEDER CABLE/CONDUIT SIZE REQUIREMENTS TO TOWER UPS, SEE KEYNOTE #260536 ON DRAWING E2.2C.
22. TOWER UPS FURNISHED BY SECURITY ELECTRONICS VENDOR/INTEGRATOR AND INSTALLED AND WIRED BY ELECTRICAL CONTRACTOR.
23. BOND GROUND LUG TO BUILDING GROUNDING ELECTRODE SYSTEM (I.E. MAIN BUILDING GROUND BUS BAR, IN MECHANICAL / ELECTRICAL #A1066) USE A MINIMUM #4 GREEN INSULATED GROUNDING ELECTRODE CABLE.
24. PROVIDE PERMANENT PLAQUE AT EACH SERVICE ENTRANCE DISCONNECT PER NEC. INDICATE LOCATIONS OF OTHER SERVICE ENTRANCE DISCONNECTS ON THE PLAQUE.
25. FURNISH AND INSTALL 600VAC, 3-POLE, 200A SERVICE ENTRANCE RATED HEAVY DUTY FUSED SAFETY DISCONNECT SWITCH 'DIS-DIS' IN NEMA 3R ENCLOSURE, FUSE AT 200A. REFER TO DRAWING E1.0 FOR LOCATION.
26. FURNISH AND INSTALL 600VAC, 3-POLE, 200A SERVICE ENTRANCE RATED HEAVY DUTY FUSED SAFETY DISCONNECT SWITCH 'DIS-TOW' IN NEMA 3R ENCLOSURE, FUSE AT 200A. REFER TO DRAWING E1.0 FOR LOCATION.
27. ANNUNCIATOR 'GAAP-1' LOCATED IN ELECTRICAL #A1066.
28. ANNUNCIATOR 'GAAP-3' LOCATED IN DISPATCH #B1006.
29. ~~ATS ANNUNCIATOR 'ATS-ANN-3' LOCATED IN DISPATCH #B1006.~~
30. (ALTERNATE BID) ATS ANNUNCIATOR 'ATS-ANN-4' LOCATED IN COMMUNICATIONS SHELTER, FIELD VERIFY EXACT LOCATION. (A3)
31. REMOTE FLUSH MOUNTED SURGE PROTECTIVE DEVICE (SPD). REFER TO SPECIFICATION 264313 FOR DETAILED EQUIPMENT REQUIREMENTS. PROVIDE WITH 36" PRE-WIRED LEADS, FILTER, FLUSH MOUNTING PLATE, MEDIUM SIZED IN POWDER COATED METAL.

DLZ
ARCHITECTURE • ENGINEERING • PLANNING
SURVEYING • CONSTRUCTION SERVICES
DLZ INDIANA, LLC

02-16-2022
TIMOTHY K. FOUGHT, REGISTERED No. PE19700119, STATE OF INDIANA, PROFESSIONAL ENGINEER

NO.	REVISION	DATE
A1	ADDENDUM 1	01/20/22
A2	ADDENDUM 2	02/02/22
A3	ADDENDUM 3	02/16/22

DRAWN: RDW CHK'D: TKF
DESIGNED: RDW
APPRV'D: TKF
DATE: DECEMBER 20, 2021
PROJECT NUMBER 2063-1048-90

SULLIVAN COUNTY SHERIFF'S OFFICE AND CORRECTIONAL FACILITY

2357 NORTH SECTION STREET SULLIVAN, INDIANA 47882

ONE-LINE DIAGRAM

DRAWING NUMBER
E7.1
ELECTRICAL

C:\RevitBackups\2020\2063-1048-90 Sullivan County Jail - Elect_rwilley-DLZ.rvt
2/16/2022 4:07:11 PM