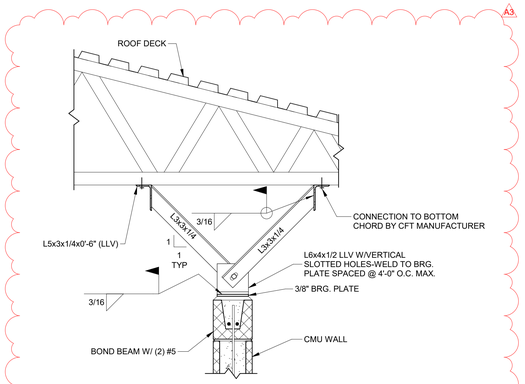


**9 TYPICAL TOP OF NON-BEARING CMU WALL ATTACHMENT TO CFT DETAIL - WALL NOT EXTENDED TO THE UNDERSIDE OF DECK**
SCALE: NTS

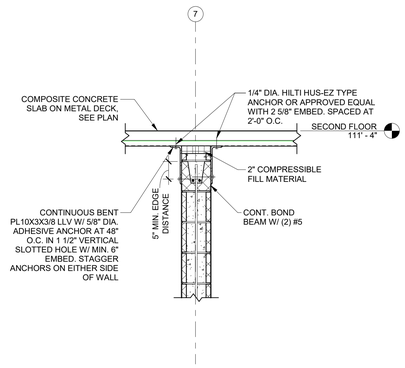


**8 SECTION**
SCALE: 3/4" = 1'-0"

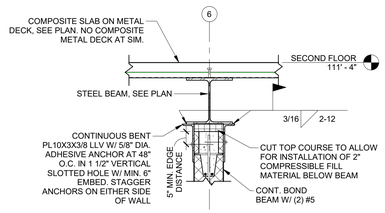


**7 SECTION**
SCALE: 3/4" = 1'-0"

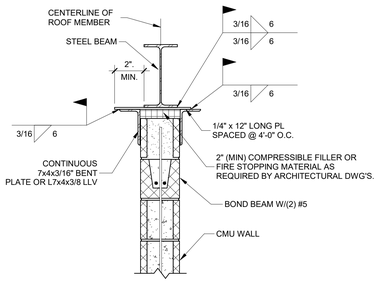


NOTE:
1. WALL AND MEMBER CENTER LINE MAY BE OFFSET 8" MAX.

**6 TYPICAL TOP OF NON-BEARING CMU WALL ATTACHMENT TO STEEL DETAIL - WALL PARALLEL TO UNDERSIDE OF MEMBER**
SCALE: NTS

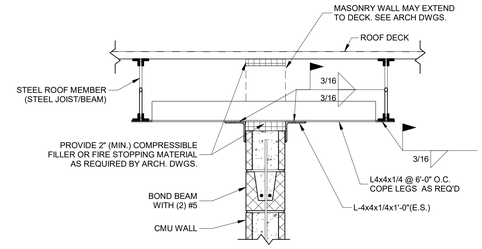


**5 TYPICAL TOP OF NON-BEARING CMU WALL ATTACHMENT TO STEEL DETAIL - WALL PARALLEL TO MEMBER**
SCALE: NTS

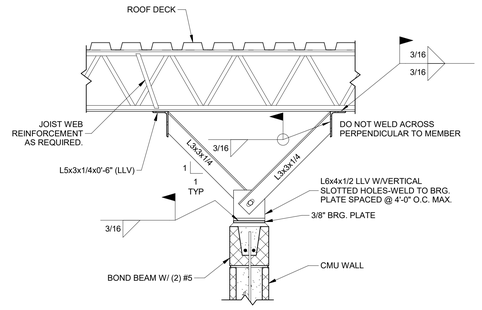


**4 TYPICAL TOP OF NON-BEARING CMU WALL ATTACHMENT TO STEEL DETAIL - WALL NOT EXTENDED TO THE UNDERSIDE OF DECK**
SCALE: NTS

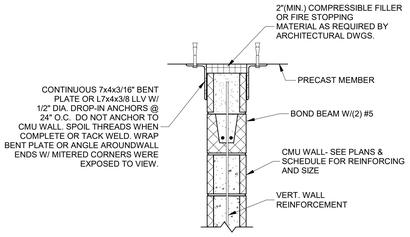


**3 TYPICAL TOP OF NON-BEARING CMU WALL ATTACHMENT TO PRECAST DETAIL**
SCALE: NTS

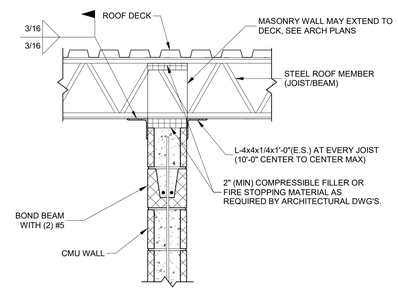


**2 TYPICAL TOP OF NON-BEARING CMU WALL ATTACHMENT TO STEEL DETAIL - WALL PERP. TO MEMBER**
SCALE: NTS

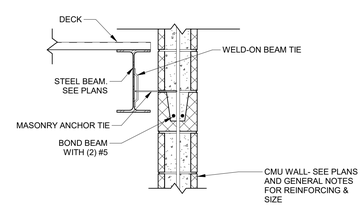


**1 TYPICAL TOP OF NON-LOAD BEARING CMU WALL BRACE TO STEEL MEMBER DETAIL - WALL PARALELL AND BESIDE STEEL EDGE MEMBER**
SCALE: NTS

A3
A2
A1

C:\Revit\Backups\2020\2063-1048-90 Sullivan County Jail - Struct_kjackowskiHSYGV.rvt
2/16/2022 10:27:19 AM

DLZ
ARCHITECTURE • ENGINEERING • PLANNING
SURVEYING • CONSTRUCTION SERVICES
DLZ INDIANA, LLC

2022/02/16
ELLIOTT G. ALLEN
REGISTERED
No. 900000
STATE OF INDIANA
PROFESSIONAL ENGINEER

| NO. | REVISION | DATE |
|---|---|---|
| A1 | ADDENDUM 1 | 01/20/22 |
| A2 | ADDENDUM 2 | 02/08/22 |
| A3 | ADDENDUM 3 | 02/16/22 |

DRAWN: KJJ
DESIGNED: KJJ
APPRVD: EGA
DATE: DECEMBER 20, 2021
CHK'D: EGA

PROJECT NUMBER
2063-1048-90

SULLIVAN COUNTY SHERIFF'S OFFICE AND CORRECTIONAL FACILITY
2357 NORTH SECTION STREET SULLIVAN, INDIANA 47882

TYPICAL MASONRY DETAILS & SECTIONS

DRAWING NUMBER
S4.1

STRUCTURAL