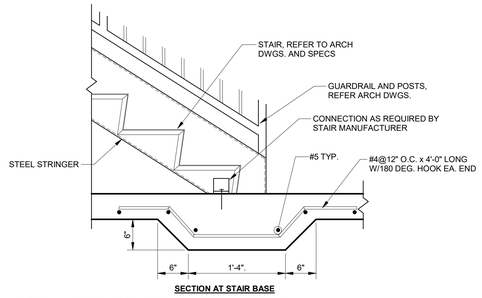


**8 TYPICAL THICKENED SLAB DETAIL AT STEEL STAIR BASE**
SCALE: NTS

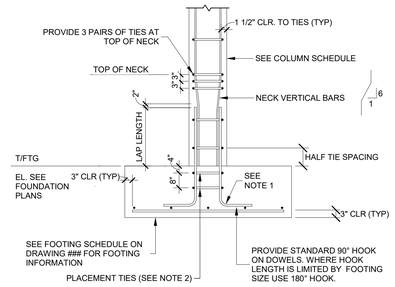


NOTES:
1. PROVIDE FOOTING DOWELS TO MATCH COLUMN REINFORCEMENT.
2. PROVIDE ADDITIONAL PLACEMENT TIES SPACED AT 12" IN FOOTINGS 3'-0" OR MORE IN THICKNESS.

**12 TYPICAL FOOTING WITH CONCRETE COLUMN**
SCALE: NTS

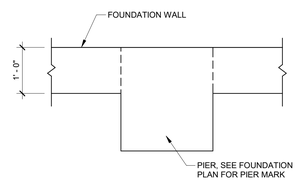


NOTES:
1. FOUNDATION WALL STEEL SHALL BE CONTINUOUS THROUGH PIER.

**7 PIER LOCATIONS**
SCALE: NTS

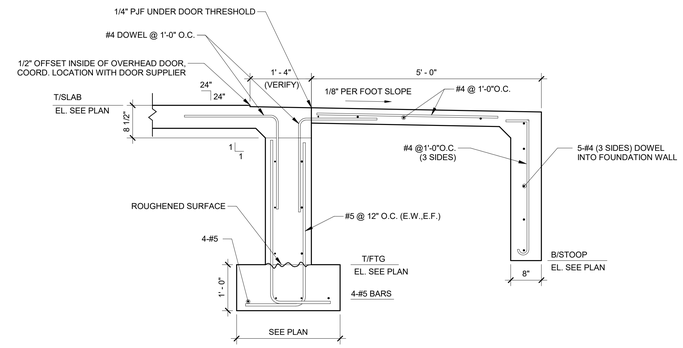


**3 TYPICAL STOOP SECTION - OVERHEAD DOOR**
SCALE: NTS

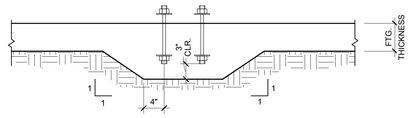


NOTE:
USE THIS DETAIL WHEN THE SPECIFIED ANCHOR ROD LENGTH IS GREATER THAN THE FOOTING THICKNESS.

**2 TYPICAL THICKENED FTG. DETAIL**
SCALE: NTS

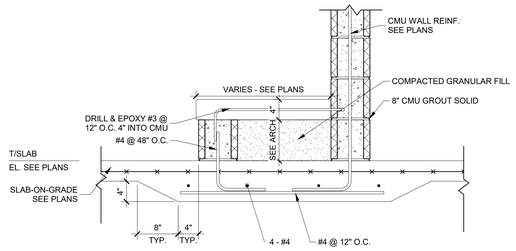


**6 TYPICAL BENCH DETAIL**
SCALE: NTS

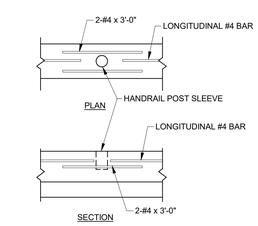


**11 HANDRAIL POST BOXOUT IN CONCRETE CURB**
SCALE: NTS

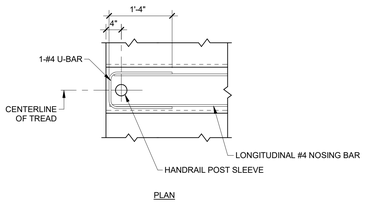


**10 HANDRAIL POST BOXOUT IN CONCRETE STAIRS**
SCALE: NTS

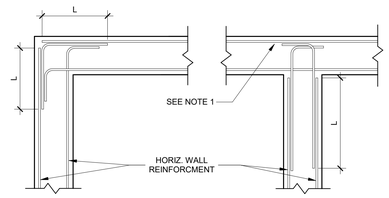


NOTES:
1. MINIMUM BEND LENGTH = 12 BAR DIAMETERS.
2. CORNER BARS MAY BE AN EXTENSION OF THE WALL REINF. AT THE OPTION OF THE CONTRACTOR.
3. L = THE LAP LENGTH OF THE SMALLER BAR OR THE DEVELOPMENT LENGTH OF THE LARGER BAR WHICH EVER IS GREATER.
4. VERTICAL WALL REINFORCEMENT NOT SHOWN.
5. SEE PLANS AND DETAILS FOR SIZE OF HORIZONTAL AND VERTICAL REINFORCEMENT.
6. DETAIL SIMILAR AT WALLS WITH A SINGLE MAT OF REINFORCEMENT.

**5 STANDARD HORIZONTAL CORNERS AND "T" WALL REINFORCEMENT DETAILS - 1**
SCALE: NTS

| HEIGHT | "A" BARS | "B" BARS |
|---|---|---|
| TO 1'-0" | 1-#4 | #4 @ 18" |
| 1'-0" TO 2'-0" | 2-#4 | #4 @ 18" |
| 2'-0" TO 3'-0" | 3-#4 | #4 @ 12" |
| 3'-0" TO 4'-0" | 4-#4 | #4 @ 12" |

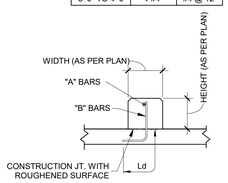


Ld = DEVELOPMENT LENGTH AS PER GENERAL STRUCTURAL NOTES, BUT 90 DEG. HOOK NOT LESS THAN STANDARD.

**9 CONCRETE CURB**
SCALE: NTS

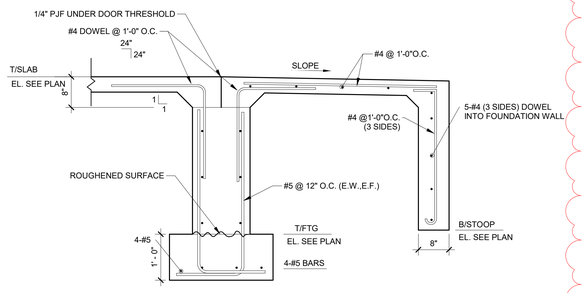


**4 TYPICAL STOOP SECTION - MAN DOOR**
SCALE: NTS

A3

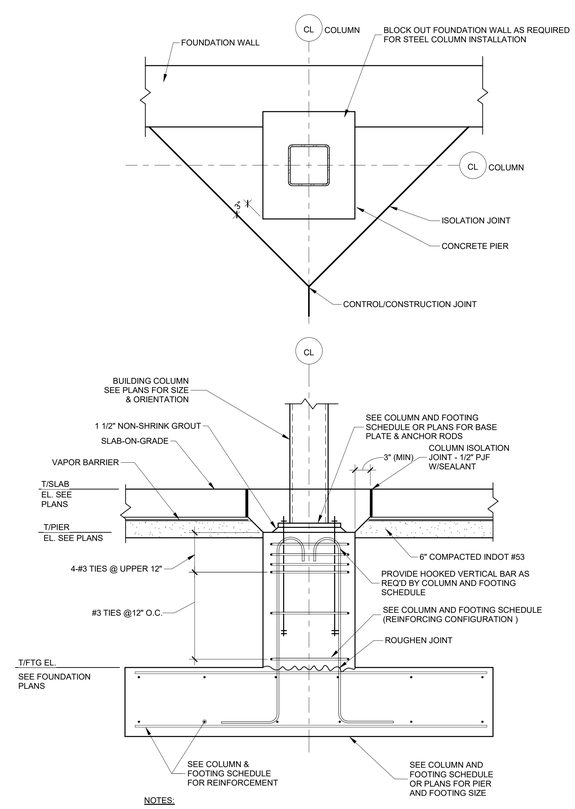


NOTES:
1. SIMILAR AT INTERIOR COLUMNS WITHOUT PIERS OR FOUNDATION WALL.
2. WHERE COLUMN IS LOCATED AT EXTERIOR WALL, FOUNDATION WALL HORIZONTAL REINFORCEMENT SHALL EXTEND THROUGH CONCRETE PIER OR COLUMN.

**1 TYPICAL STEEL COLUMN FOOTING DETAIL**
SCALE: NTS

DLZ
ARCHITECTURE • ENGINEERING • PLANNING
SURVEYING • CONSTRUCTION SERVICES
DLZ INDIANA, LLC

| NO. | REVISION | DATE |
|---|---|---|
| A3 | ADDENDUM 3 | 02/16/22 |

DRAWN: KJJ CHK'D: EGA
DESIGNED: KJJ
APPRV'D: EGA
DATE: DECEMBER 20, 2021

PROJECT NUMBER
2063-1048-90

SULLIVAN COUNTY SHERIFF'S OFFICE AND CORRECTIONAL FACILITY
2357 NORTH SECTION STREET SULLIVAN, INDIANA 47882

TYPICAL FOUNDATION DETAILS & SECTIONS

DRAWING NUMBER
S3.1

STRUCTURAL

C:\RevitBackups\2020\2063-1048-90 Sullivan County Jail - Struct_kjackowski43YGV.rvt
2/16/2022 10:27:13 AM