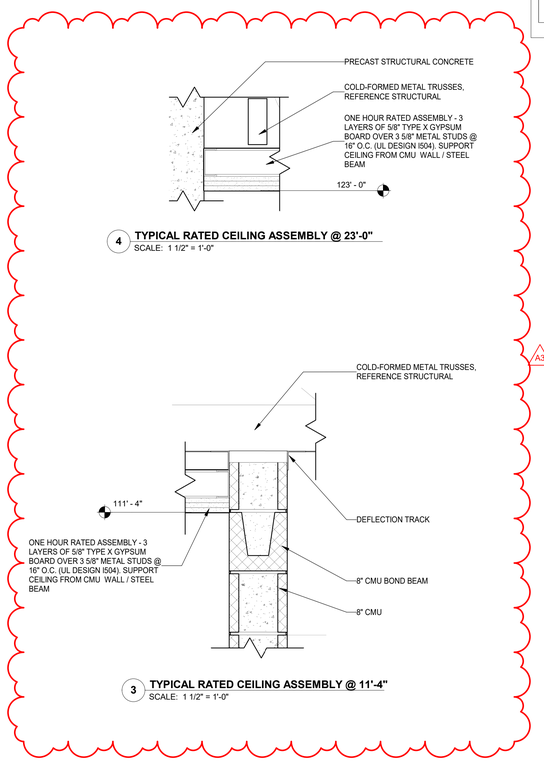


4 **TYPICAL RATED CEILING ASSEMBLY @ 23'-0"**
SCALE: 1 1/2" = 1'-0"

3 **TYPICAL RATED CEILING ASSEMBLY @ 11'-4"**
SCALE: 1 1/2" = 1'-0"

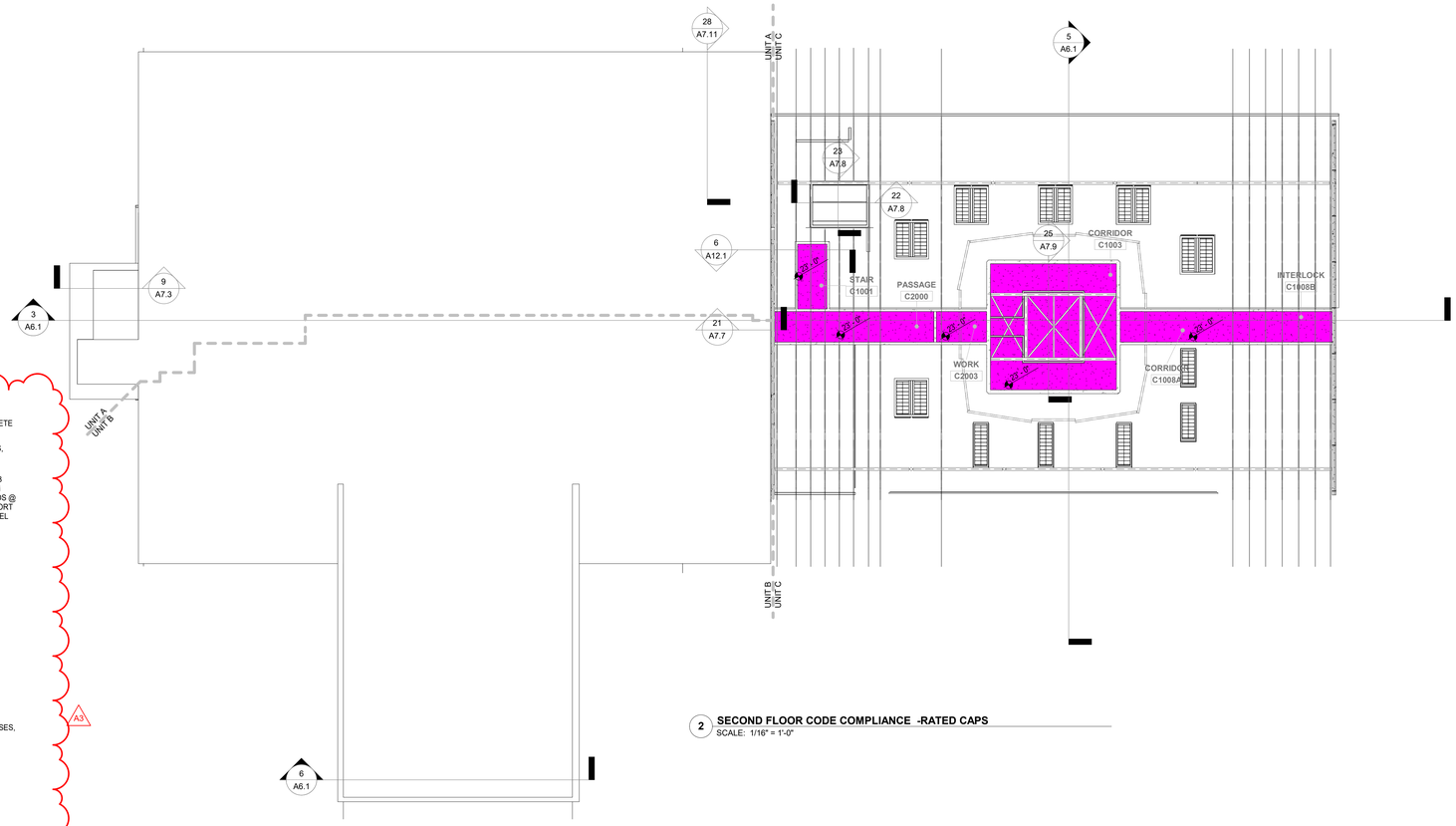


2 **SECOND FLOOR CODE COMPLIANCE -RATED CAPS**
SCALE: 1/16" = 1'-0"

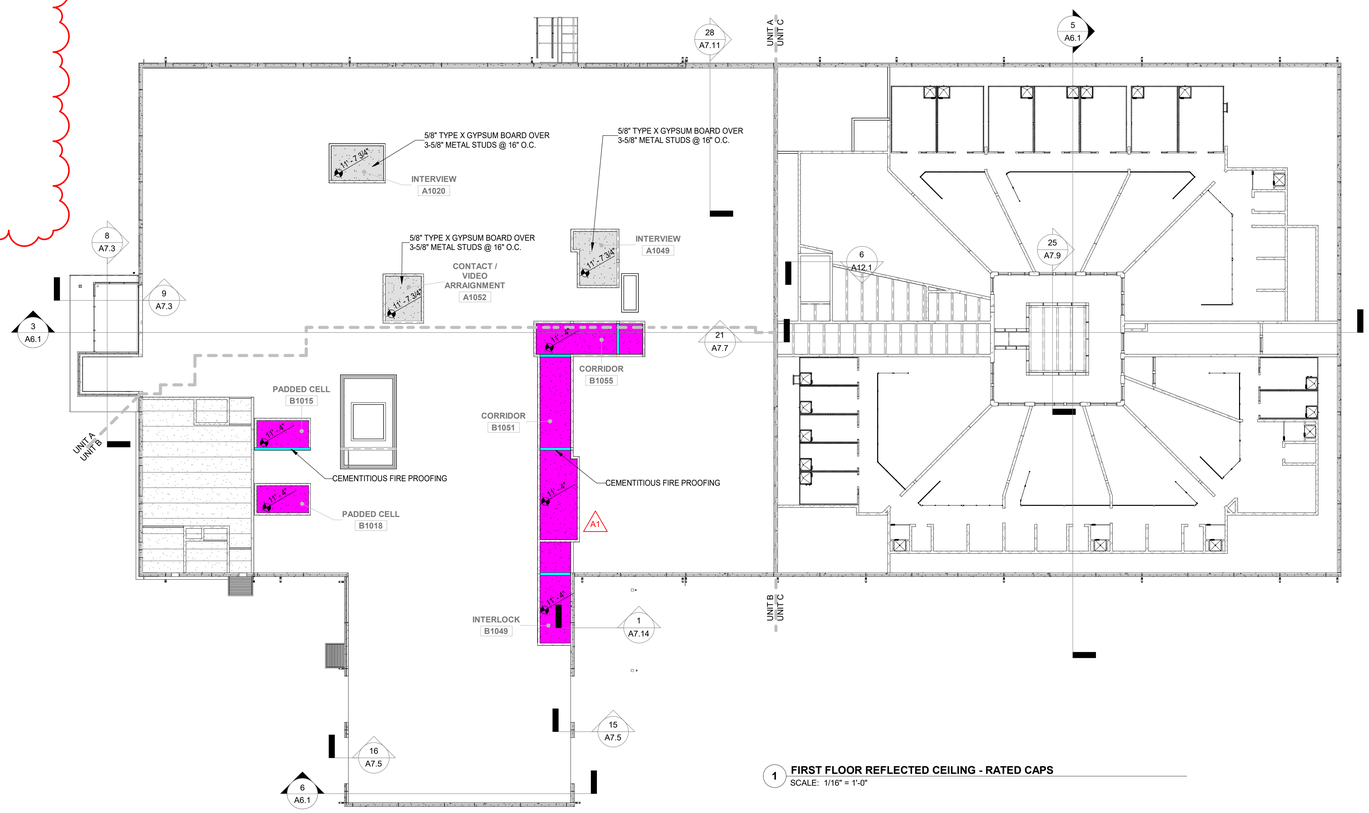


1 **FIRST FLOOR REFLECTED CEILING - RATED CAPS**
SCALE: 1/16" = 1'-0"

## RATED CAP LEGEND:

- CEMENTITIOUS FIRE PROOFING ON STRUCTURAL COMPONENTS BELOW THE DECKING
- ONE HOUR RATED ASSEMBLY - 3 LAYERS OF 5/8" TYPE X GYPSUM BOARD OVER 3 5/8" METAL STUDS @ 16" O.C. (UL DESIGN I504)
- GYPSUM BOARD ON METAL STUD
- PRECAST HOLLOW CORE PLANK, REFERENCE STRUCTURAL

NOTE:
ELEMENTS ON THIS DRAWING ARE IDENTIFIED BY VARIOUS COLORS; IF THIS NOTE IS NOT RED, THIS DRAWING IS NOT IN COLOR AND NEEDS TO BE REPRINTED IN COLOR.

## KEYPLAN

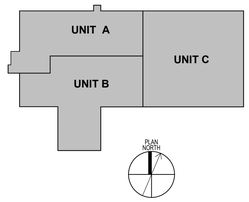


DLZ
ARCHITECTURE • ENGINEERING • PLANNING
SURVEYING • CONSTRUCTION SERVICES
DLZ INDIANA, LLC

2022-02-16
BRIG. B. DATTS
REGISTERED ARCHITECT
AR10000108
STATE OF INDIANA

| NO. | REVISION | DATE |
|---|---|---|
| A1 | ADDENDUM 1 | 01/20/22 |
| A3 | ADDENDUM 3 | 02/16/22 |

DRAWN: KPK CHK'D: KPK
DESIGNED: EBR
APPROV'D: EBR
DATE: DECEMBER 20, 2021

PROJECT NUMBER
2063-1048-90

SULLIVAN COUNTY SHERIFF'S OFFICE AND CORRECTIONAL FACILITY
2357 NORTH SECTION STREET SULLIVAN, INDIANA 47882

CODE COMPLIANCE PLANS - RATED CAPS

DRAWING NUMBER
G1.6

GENERAL

C:\RevitBackups\2020\2063-1048-90 Sullivan County Jail - Arch_zmcqjll4TEWM.rvt
2/15/2022 5:50:30 PM