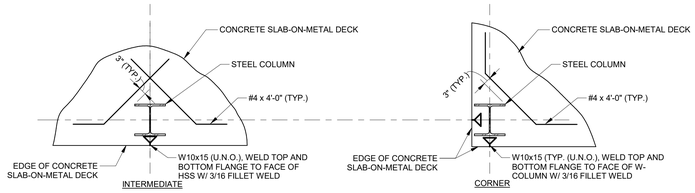


**9 TYPICAL ADDITIONAL CONCRETE SLAB-ON-METAL DECK REINFORCING AT EDGE COLUMN**
SCALE: NTS

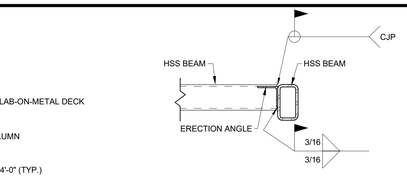


**13 TYPICAL HSS BEAM TO HSS BEAM MOMENT CONNECTION**
SCALE: NTS

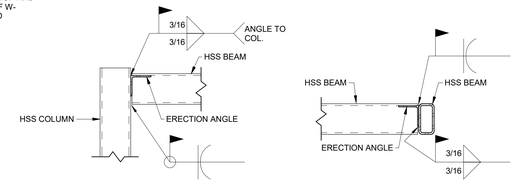


**6 TYPICAL HSS BEAM TO HSS COLUMN**
SCALE: NTS

**5 TYPICAL HSS BEAM TO HSS BEAM**
SCALE: NTS

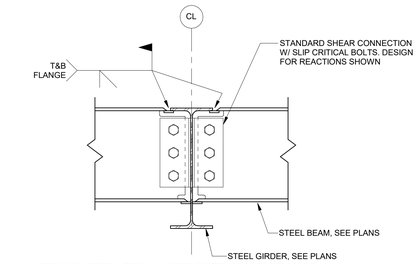


**12 TYPICAL STEEL BEAM CANTILEVER CONNECTION AT GIRDER**
SCALE: 1 1/2" = 1'-0"

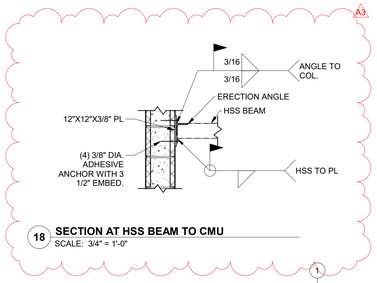


**18 SECTION AT HSS BEAM TO CMU**
SCALE: 3/4" = 1'-0"

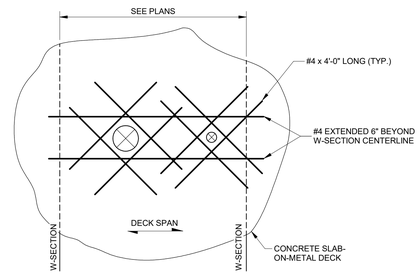


NOTES:

A2

1. PENETRATION CORED AFTER CONCRETE IS PLACED AND GAINED FULL STRENGTH.
2. DETAIL APPLIES TO PENETRATION 6" TO 24".
3. REFERENCE DETAIL 11/S5.1 FOR COMPOSITE SLAB OPENING SUPPORT REQUIREMENTS.

**11 TYPICAL CONCRETE SLAB-ON-METAL DECK REINFORCING PENETRATION**
SCALE: NTS

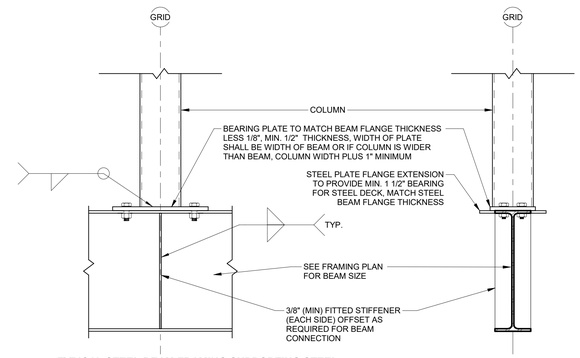


**14 TYPICAL STEEL BEAM FRAMING SUPPORTING STEEL COLUMN**
SCALE: 1" = 1'-0"

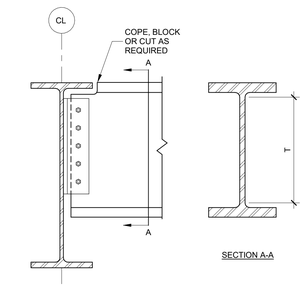


NOTES:

1. DESIGN CONNECTION AS STANDARD AISC SIMPLE DOUBLE ANGLE TO RESIST 100% OF THE END REACTIONS INDICATED ON THE FLOOR PLANS UNLESS SPECIFICALLY DETAILED.
2. CONTRACTOR HAS OPTION TO BOLT OR WELD ANGLES UNLESS SPECIFICALLY DETAILED.
3. SIMILAR DETAIL AT BEAM TO COLUMN CONNECTION.
4. CONNECTION TO BE A MINIMUM OF 2/3 T.

**3 TYPICAL BEAM/GIRDER CONNECTION**
SCALE: NTS

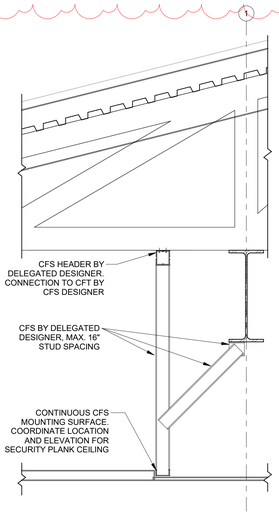


**17 SECURITY PLANK CEILING SUPPORT - PERPENDICULAR CFT WITH PARALLEL STEEL BEAM**
SCALE: 3/4" = 1'-0"

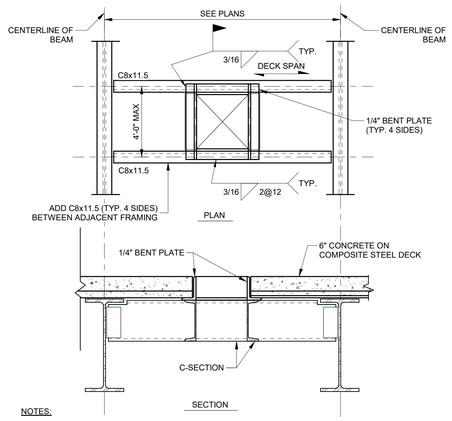


NOTES:

1. COORDINATE OPENING SIZES AND LOCATIONS WITH MECHANICAL, ELECTRICAL AND PLUMBING.
2. PROVIDE STEEL FRAME AROUND ALL OPENINGS WITH ANY DIMENSION 12" OR LARGER.
3. PROVIDE STEEL FRAME AROUND ANY GROUP OF TWO OR MORE PENETRATIONS WITH LESS THAN 12" CLEAR BETWEEN PENETRATIONS.
4. PROVIDE ADDITIONAL CONCRETE SLAB REINFORCING AROUND OPENINGS PRIOR TO PLACEMENT OF CONCRETE IN ACCORDANCE WITH 2/S5.1.

**10 TYPICAL COMPOSITE SLAB OPENING**
SCALE: NTS

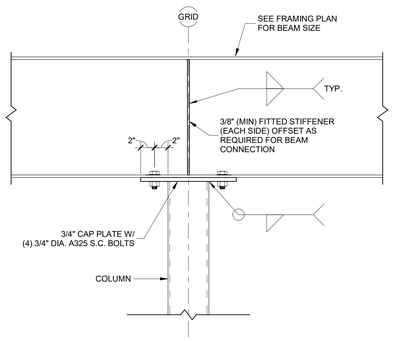


**4 TYPICAL BEAM FRAMING OVER COLUMN DETAIL CONNECTION**
SCALE: NTS

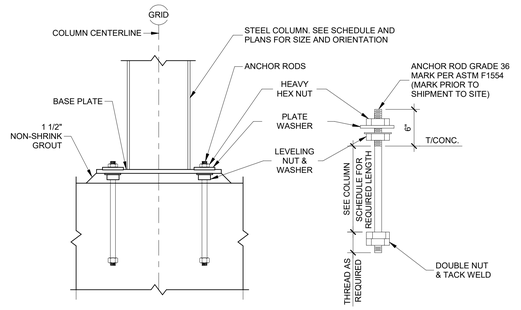


**2 TYPICAL STEEL COLUMN ANCHOR DETAIL**
SCALE: NTS

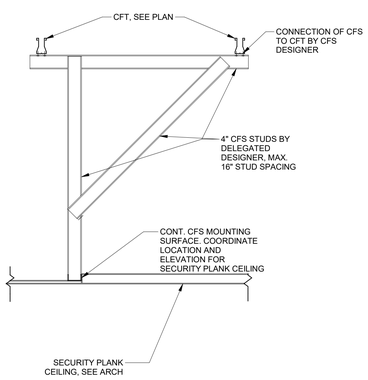


**15 SECURITY PLANK CEILING SUPPORT - PARALLEL CFT**
SCALE: 3/4" = 1'-0"

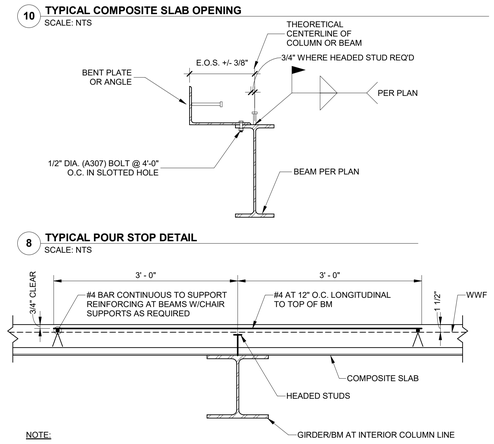


NOTE:

1. PROVIDE STANDARD 180 DEGREE HOOKED END WHERE OPENINGS IN FLOOR SLABS INTERRUPT THE 3'-0" #4 REINFORCING PROJECTION BEYOND CENTERLINE OF GIRDER/BEAM AT INTERIOR COLUMN LINE.

**8 TYPICAL POUR STOP DETAIL**
SCALE: NTS

**7 TYPICAL REINFORCED COMPOSITE SLAB DETAILS**
SCALE: NTS

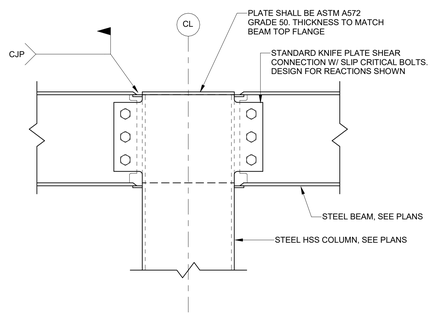


**16 TYPICAL STEEL MOMENT CONNECTION TO HSS COLUMN**
SCALE: 1 1/2" = 1'-0"

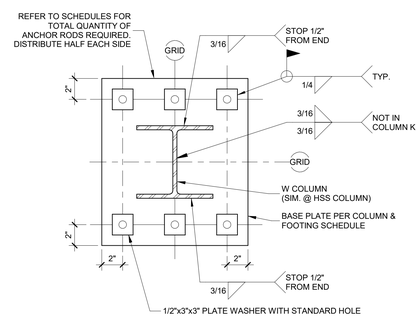


| ROD DIA. | B.P. HOLE DIA. (IN.) | PLATE WASHER |
|---|---|---|
| 3/4" | 1 5/16" | 2"x2"x3/8" |
| 1" | 1 13/16" | 3"x3"x3/8" |
| 1 1/4" | 2 1/16" | 3"x3"x1/2" |
| 1 1/2" | 2 5/16" | 3 1/2"x3 1/2"x1/2" |

**1 COLUMN BASE PLATE PLAN DETAIL**
SCALE: NTS

DLZ
ARCHITECTURE • ENGINEERING • PLANNING
SURVEYING • CONSTRUCTION SERVICES
DLZ INDIANA, LLC

2022/02/16
ELLIOTT G. ALLEN REGISTERED No. 900000 STATE OF INDIANA PROFESSIONAL ENGINEER

| NO. | REVISION | DATE |
|---|---|---|
| A2 | ADDENDUM 2 | 02/02/22 |
| A3 | ADDENDUM 3 | 02/16/22 |

DRAWN: KJJ
DESIGNED: KJJ
APPRV'D: EGA
DATE: DECEMBER 20, 2021
CHK'D: EGA

PROJECT NUMBER
2063-1048-90

SULLIVAN COUNTY SHERIFF'S OFFICE AND CORRECTIONAL FACILITY
2357 NORTH SECTION STREET SULLIVAN, INDIANA 47882

TYPICAL FRAMING DETAILS & SECTIONS

DRAWING NUMBER
S5.0

STRUCTURAL

C:\RevitBackups\2020\2063-1048-90 Sullivan County Jail - Struct_kjackowskiH3YGV.rvt
2/16/2022 10:27:22 AM