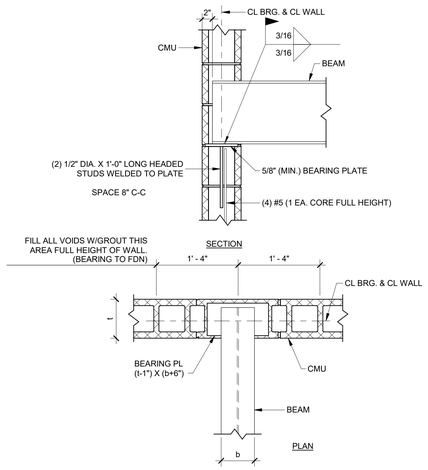


**17 TYPICAL STEEL BEAM BEARING ON PERPINDICULAR CMU WALL DETAIL**
SCALE: NTS

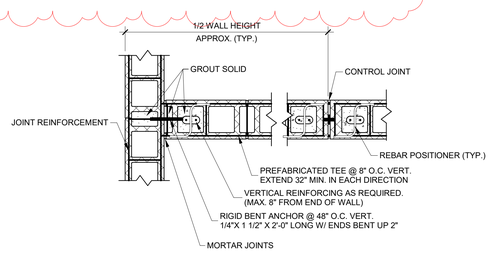


NOTES:
1. SEE SECTIONS FOR CMU WALL VERTICAL REINFORCING-REINFORCING SHOWN IS IN ADDITION TO THAT NOTED IN THE SCHEDULE.
2. CONTRACTOR SHALL PROVIDE PREFABRICATED CORNER HORIZONTAL REINFORCEMENT IN CMU CORNERS AND TEE HORIZONTAL REINFORCEMENT AT CMU T-INTERSECTIONS.
3. AT CONTRACTORS OPTION PROVIDE EITHER PREFABRICATED TEE JOINT REINF. @ 8" O.C. OR RIGID WALL TIES @ 4'-0" O.C.

**15 INT. OF INTERIOR WALLS (LOAD BEARING)**
SCALE: NTS

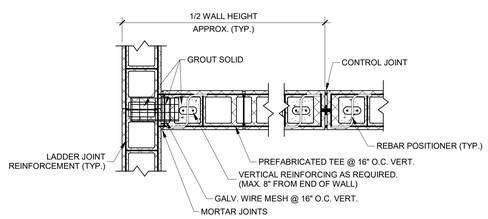


NOTES:
1. SEE SECTIONS FOR CMU WALL VERTICAL REINFORCING-REINFORCING SHOWN IS IN ADDITION TO THAT NOTED IN THE SCHEDULE.
2. CONTRACTOR SHALL PROVIDE PREFABRICATED CORNER HORIZONTAL REINFORCEMENT IN CMU CORNERS AND TEE HORIZONTAL REINFORCEMENT AT CMU T-INTERSECTIONS.
3. AT CONTRACTORS OPTION PROVIDE EITHER PREFABRICATED TEE JOINT REINF. @ 16" O.C. OR GALV. WIRE MESH @ 16" O.C.

**14 INT. OF INTERIOR WALLS (NON-LOAD BEARING)**
SCALE: NTS

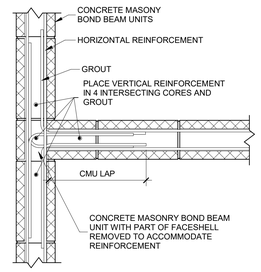


NOTE:
1. AS AN ALTERNATIVE TO USING BOND BEAM UNITS AS SHOWN, STANDARD UNITS CAN BE SAW-CUT TO REMOVE PART OF THE CROSS-WEBS TO ACCOMMODATE THE HORIZONTAL REINFORCEMENT.

**13 BOND BEAM AT T-INTERSECTION DETAIL**
SCALE: NTS

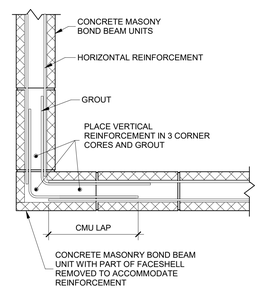


NOTE:
1. AS AN ALTERNATIVE TO USING BOND BEAM UNITS AS SHOWN, STANDARD UNITS CAN BE SAW-CUT TO REMOVE PART OF THE CROSS-WEBS TO ACCOMMODATE THE HORIZONTAL REINFORCEMENT.

**12 BOND BEAM AT CORNER DETAIL**
SCALE: NTS

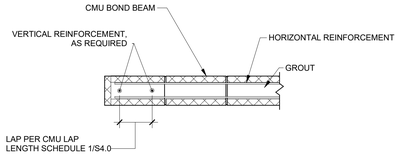


NOTE:
1. AS AN ALTERNATIVE TO USING BOND BEAM UNITS AS SHOWN, STANDARD UNITS CAN BE SAW-CUT TO REMOVE PART OF THE CROSS-WEBS TO ACCOMMODATE THE HORIZONTAL REINFORCEMENT.

**11 BOND BEAM AT END DETAIL**
SCALE: NTS

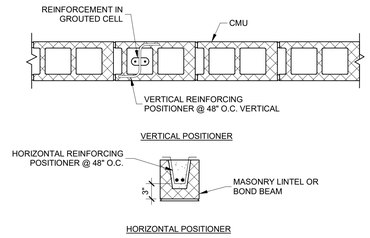


**10 TYPICAL CMU REINFORCING POSITIONERS**
SCALE: NTS

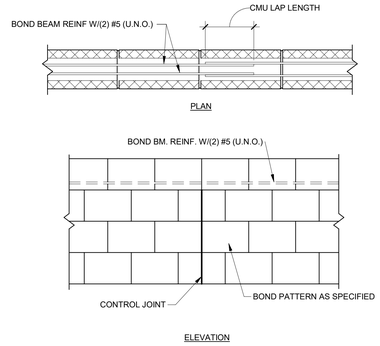


**9 BOND BEAM AT CONTROL JOINT DETAIL**
SCALE: NTS

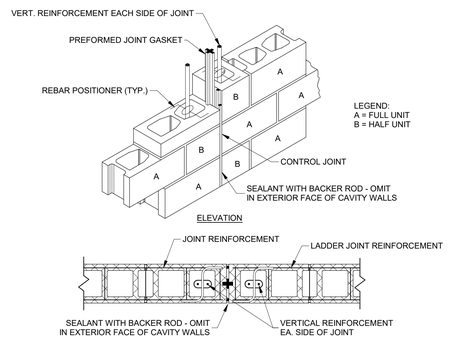


NOTES:
1. APPLICABLE TO THE CONSTRUCTION OF ALL CONTROL JOINTS IN CMU WALLS.
2. SEE STRUCTURAL GENERAL NOTES ON SHEET S0.1 FOR TYPICAL CMU CONTROL JOINT LOCATION AND SPACING REQUIREMENTS.

**8 CMU WALL CONTROL JOINT DETAIL**
SCALE: NTS

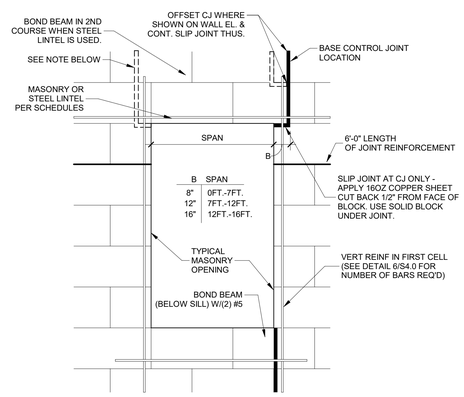


NOTE:
1. CONTROL JOINT SHALL BE PROVIDED AT BOTH JAMBS OF WALL OPENINGS OVER 6 FT WIDE.

**7 CONTROL JOINT AT CMU OPENING**
SCALE: NTS

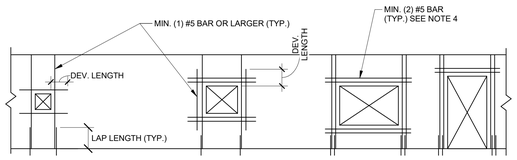


CASE I:
APPLIES TO (1) ALL OPENINGS IN NON-BEARING CMU WALLS AND (2) ANY OPENING 2- FEET OR LESS BOTH WAYS IN LOAD BEARING OR EXTERIOR CMU WALLS.

CASE II:
APPLIES TO LOAD BEARING AND EXTERIOR CMU WALLS WHEN OPENING EXCEEDS 2-FEET BUT NOT MORE THAN 4-FEET IN EITHER DIRECTION.

CASE III:
APPLIES TO LOAD BEARING AND EXTERIOR CMU WALLS WHEN OPENING EXCEEDS 4-FEET IN EITHER DIRECTION AND ALL OPENING IN CMU SHEAR WALLS.

NOTES:
1. VERTICAL REINFORCEMENT CONSISTING OF 2 BARS, SHALL BE PLACED IN SEPARATE ADJACENT CELLS.
2. VERTICAL BARS SHALL BE OF THE SAME SIZE, EXTENT, AND ANCHORAGE AS THE TYPICAL REINFORCING IN THAT WALL UNLESS OTHERWISE INDICATED.
3. VERTICAL BARS CAN BE PART OF NORMAL REINFORCING IN THE WALL.
4. REINFORCEMENT AT TOP OF OPENING SHALL NOT BE LESS THAN THAT REQUIRED BY THE LINTEL SCHEDULE.

**6 REINFORCEMENT AROUND OPENING IN CMU**
SCALE: NTS

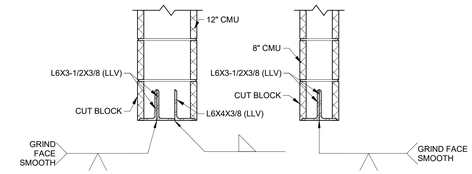


**5 MASONRY DOOR STEEL LINTEL**
SCALE: NTS

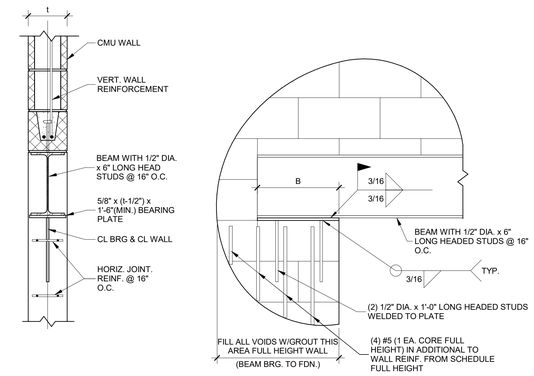


NOTES:
1. PLACEMENT OF VERTICAL CONDUIT SHALL NOT BE ALLOWED IN GROUTED CELLS.
2. SEE DETAIL 7/S4.0 FOR CONTROL JOINT REQUIREMENTS AT OPENINGS.
3. VERTICAL REINFORCEMENT TO BE IN ACCORDANCE WITH DETAIL 6/S4.0.
4. "B" SHALL BE AS DEFINED IN THE MASONRY OPENING DETAIL 7/S4.0.

**4 TYPICAL STEEL BEAM BEARING ON PARALLEL CMU WALL DETAIL**
SCALE: NTS

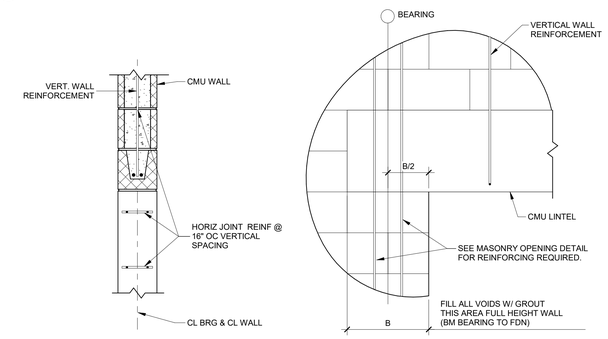


NOTES:
1. SEE DETAIL 7/S4.0 FOR CONTROL JOINT REQUIREMENTS AT OPENINGS.
2. VERTICAL REINFORCEMENT TO BE IN ACCORDANCE WITH DETAIL 6/S4.0.
3. "B" SHALL BE AS DEFINED IN THE MASONRY OPENING DETAIL 7/S4.0.

**3 CMU LINTEL BEARING DETAIL**
SCALE: NTS

LINTEL SCHEDULE
NON-BEARING AND BEARING WALLS

| LINTEL HEIGHT | REINF. | MAX. CLEAR SPAN | SECTION |
|---|---|---|---|
| 8" | (2) #5 | 6'-6" | TYPE A |
| 16" | (2) #5 | 14'-6" | TYPE B |

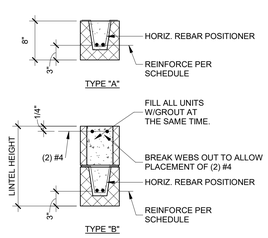


**2 CMU LINTELS SCHEDULE**
SCALE: NTS

| BAR SIZE | LAP LENGTH | HORIZ. REINF DEVELOPMENT LENGTH | VERTICAL CMU DEVELOPMENT LENGTH | | | |
|---|---|---|---|---|---|---|
| | | | 12" CMU | 10" CMU | 8" CMU | 6" CMU |
| #3 | 15" | 12" | 12" | 12" | 12" | 12" |
| #4 | 20" | 22" | 13" | 13" | 13" | 18" |
| #5 | 25" | 36" | 20" | 20" | 20" | 28" |
| #6 | 30" | 73" | 38" | 38" | 38" | - |
| #7 | 35" | 107" | 52" | 52" | 52" | - |
| #8 | 40" | 175" | 79" | 79" | 79" | - |

**1 CMU REINFORCING LAP & DEVELOPMENT LENGTH REQUIREMENTS**
SCALE: NTS

DLZ
ARCHITECTURE • ENGINEERING • PLANNING
SURVEYING • CONSTRUCTION SERVICES
DLZ INDIANA, LLC

| NO. | REVISION | DATE |
|---|---|---|
| A3 | ADDENDUM 3 | 02/16/22 |

DRAWN: KJJ
DESIGNED: KJJ
APPROV: EGA
DATE: DECEMBER 20, 2021
CHK'D: EGA
PROJECT NUMBER 2063-1048-90

SULLIVAN COUNTY SHERIFF'S OFFICE AND CORRECTIONAL FACILITY
2357 NORTH SECTION STREET SULLIVAN, INDIANA 47882

TYPICAL MASONRY DETAILS & SECTIONS

DRAWING NUMBER
S4.0

STRUCTURAL

C:\RevitBackups\2020\2063-1048-90 Sullivan County Jail - Struct_kjackowskiH3YGV.rvt
2/16/2022 10:27:16 AM