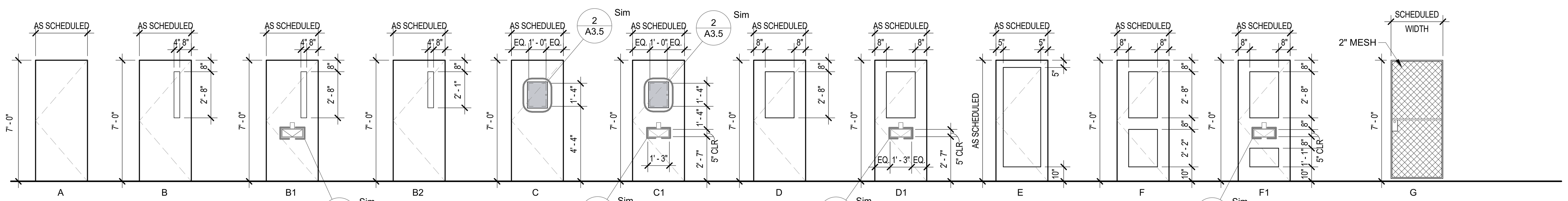

DOOR ELEVATIONS

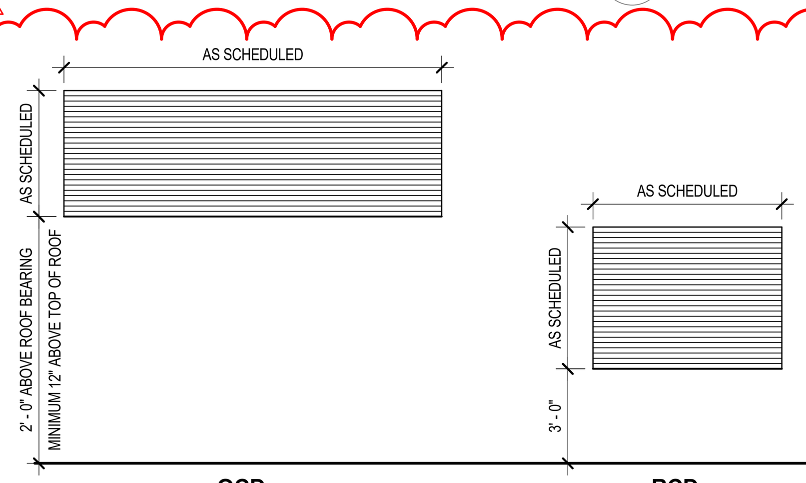

OVERHEAD COILING DOOR ELEVATIONS

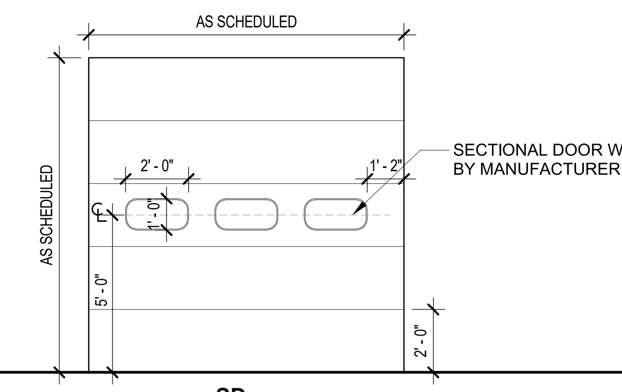

SECTIONAL DOOR ELEVATIONS

SECTION 083113
AD-1 ACCESS DOOR
AD-1F ACCESS DOOR (FIRE RATED)

SECTION 083119
SAD-1 SECURITY ACCESS DOOR
SAD-1F SECURITY ACCESS DOOR (FIRE RATED)

SECTION 083113
AD-2 ACCESS DOOR
AD-2F ACCESS DOOR (FIRE RATED)

SECTION 083119
SAD-2 SECURITY ACCESS DOOR
SAD-2F SECURITY ACCESS DOOR (FIRE RATED)

SECTION 083113
AD-3 ACCESS DOOR
AD-3F ACCESS DOOR (FIRE RATED)

SECTION 083119
SAD-3 SECURITY ACCESS DOOR
SAD-3F SECURITY ACCESS DOOR (FIRE RATED)

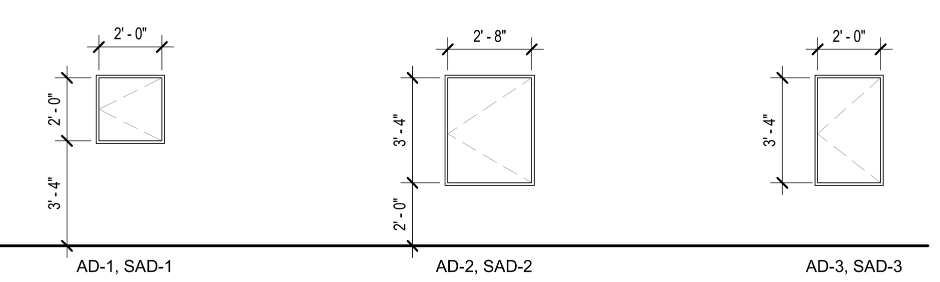

ACCESS DOOR ELEVATIONS

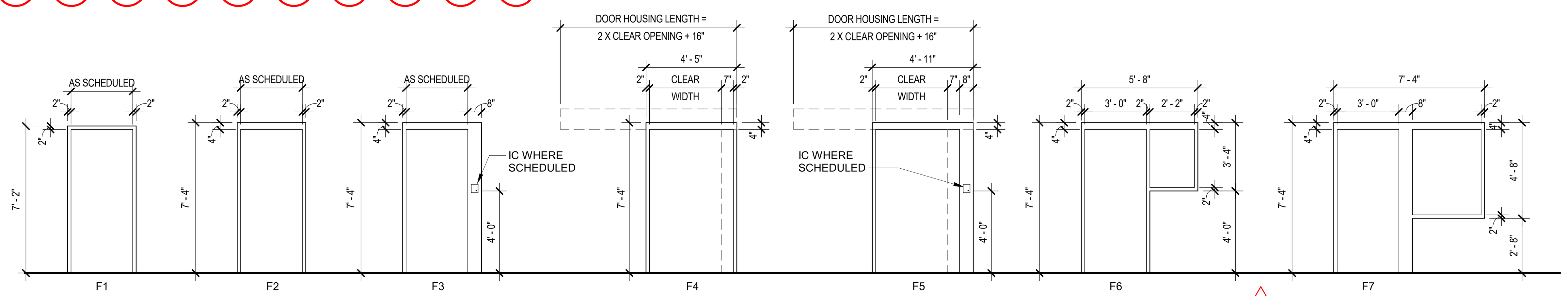

FRAME ELEVATIONS
1/4" = 1' - 0"

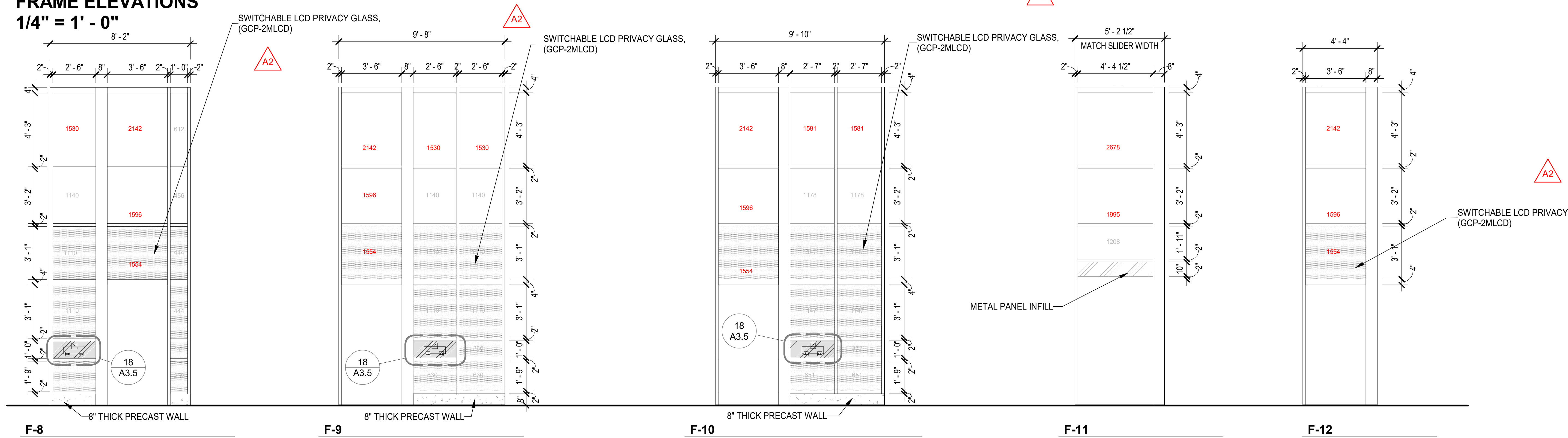

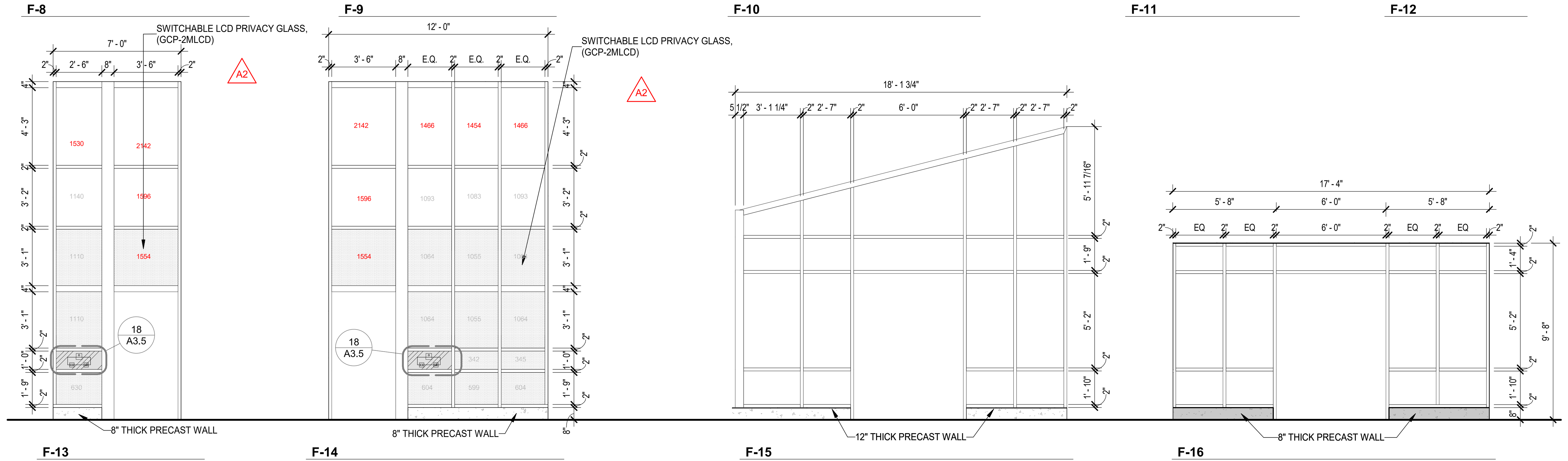

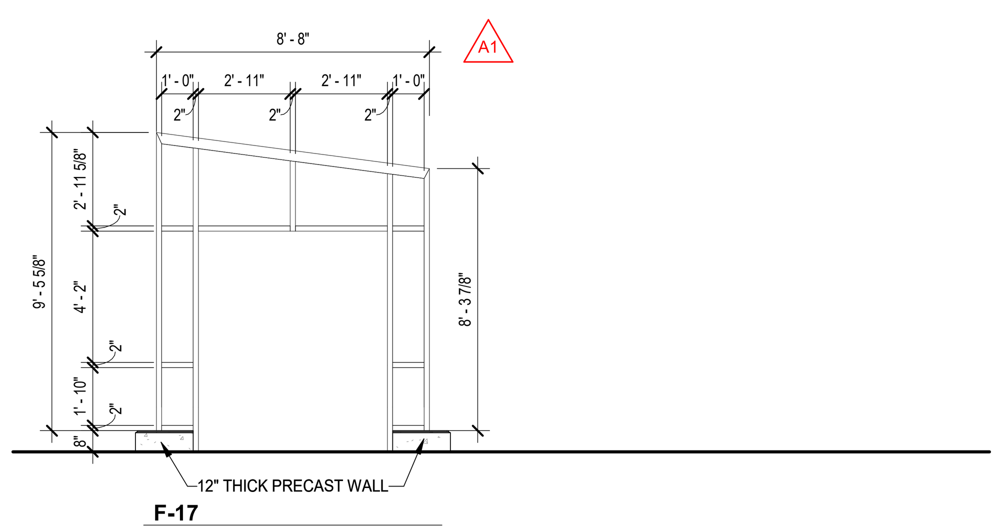

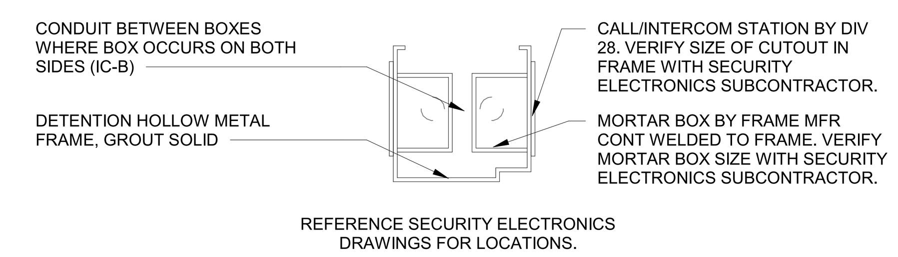

4 TYPICAL FRAME MOUNTED INTERCOM DETAIL
SCALE: 1 1/2" = 1'-0"

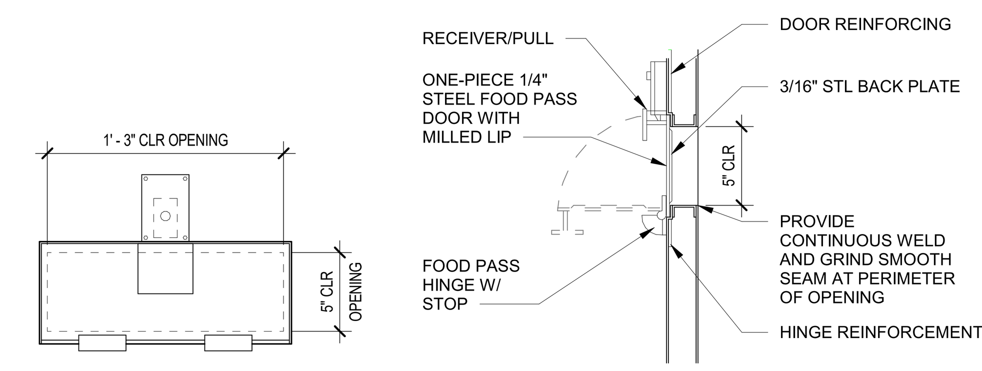

3 TYPICAL FOOD PASS DETAIL
SCALE: 1 1/2" = 1'-0"

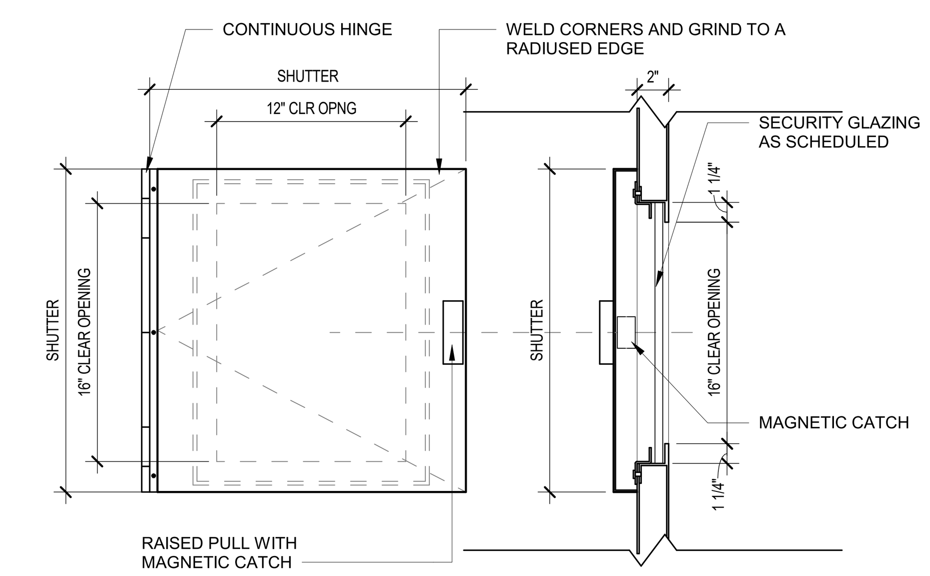

2 TYPICAL DOOR SHUTTER DETAIL
SCALE: 1 1/2" = 1'-0"

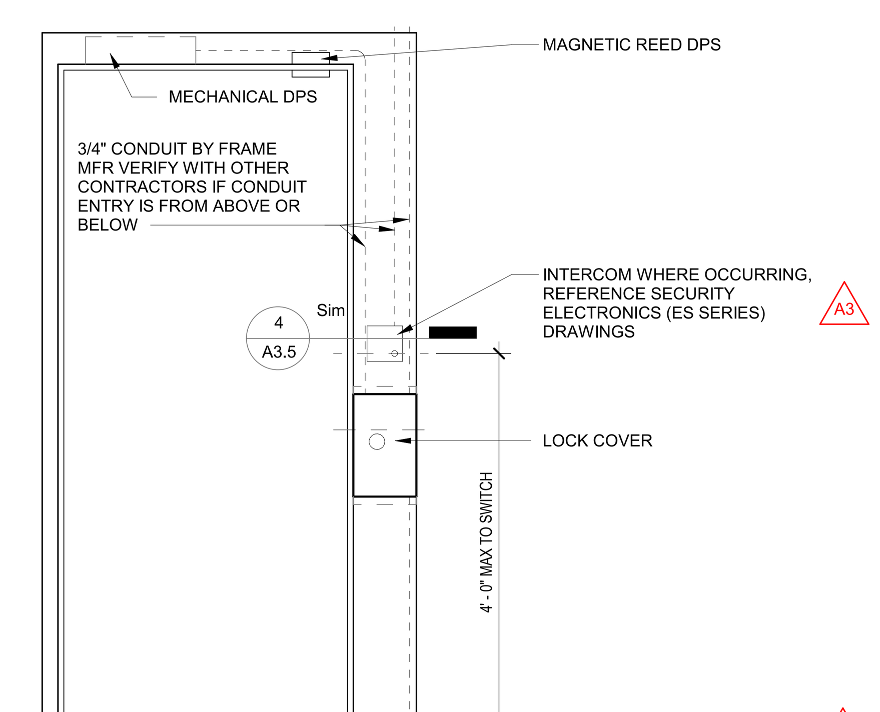

1 TYPICAL DETENTION DOOR FRAME ELEVATION
SCALE: 3/4" = 1'-0"

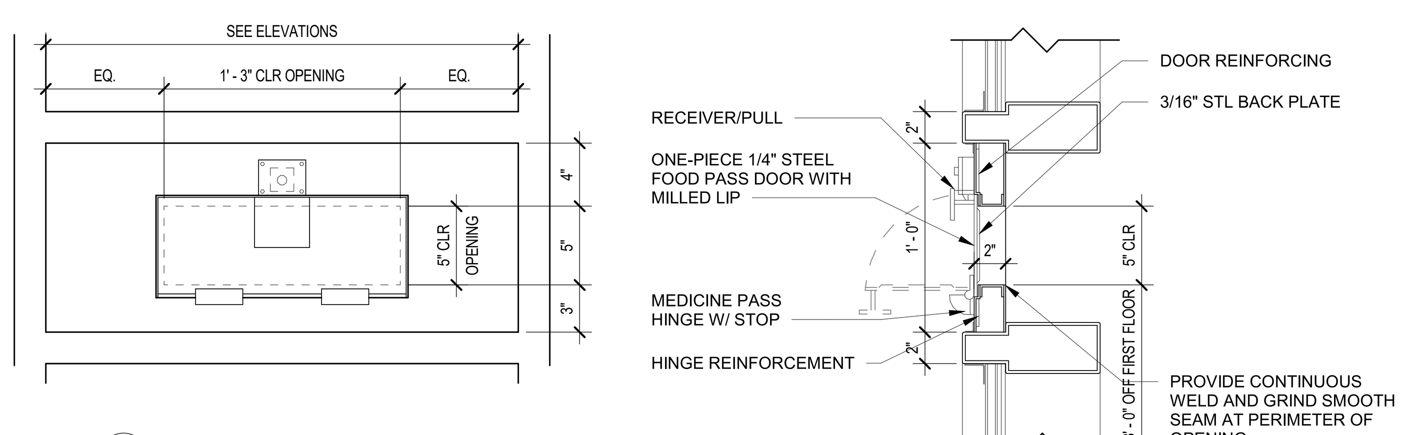

18 MEDICINE PASS DETAIL IN DETENTION FRAME
SCALE: 1 1/2" = 1'-0"

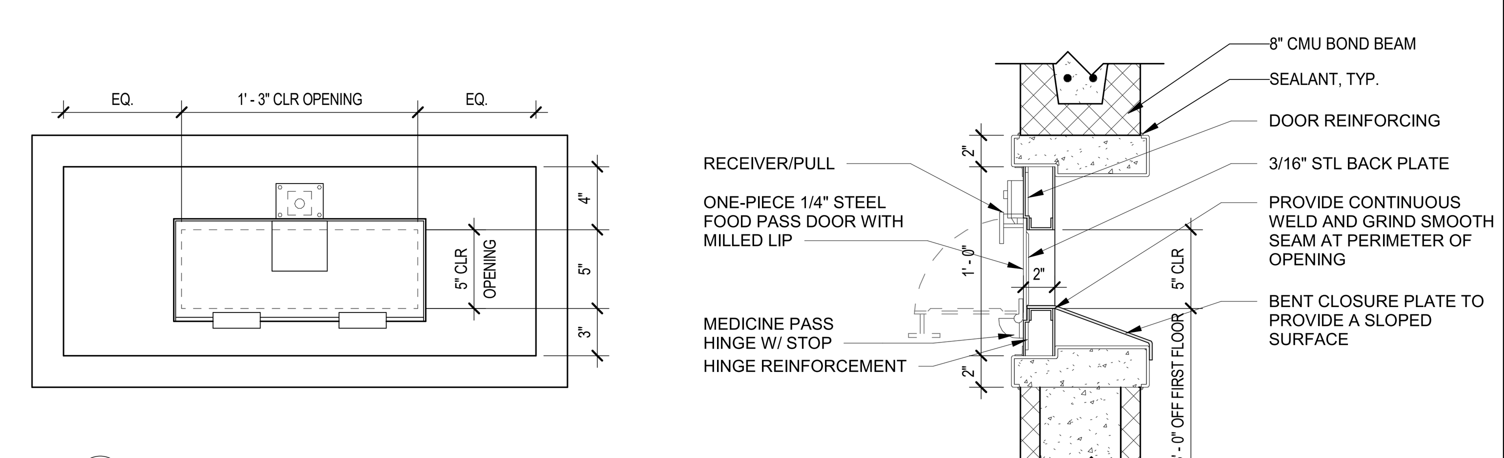

19 MEDICINE PASS DETAIL IN CMU WALL
SCALE: 1 1/2" = 1'-0"

GENERAL NOTES:

A. ADDITIONAL REQUIREMENTS. REFER TO DRAWING G1.2.
B. DOOR CONTROLS, MONITORING, CARD READERS, INTERCOMS AND LOW VOLTAGE POWER SUPPLIES TO BE PROVIDED BY DIVISION 28.
C. COORDINATE ELECTRIC HARDWARE SCHEDULED WITH SECURITY ELECTRONIC REQUIREMENTS INCLUDING WIRING AND CONNECTIONS.
D. MOUNT INTERCOMS IN 8" JAMB FRAMES. REFERENCE SECURITY ELECTRONICS DRAWINGS.
E. EXTERIOR DOORS AND FRAMES. EXTERIOR HM & DHM DOORS TO BE INSULATED, GALVANIZED AND PAINTED.
F. INTERIOR DOORS AND FRAMES. INTERIOR HM & DHM DOORS AND FRAMES TO BE PAINTED.
G. WOOD DOORS. WOOD DOORS TO BE FACTORY FINISHED.
H. SLIDING DOORS. OPENING WIDTH SCHEDULED IS CLEAR OPENING WIDTH, NOT ACTUAL WIDTH OF DOOR LEAF. CLEAR OPENING WIDTH DOES NOT INCLUDE MECHANICAL RELEASE COLUMN AND RECEIVER.
I. SIGNS OUTSIDE THE SECURE PERIMETER. PROVIDE ROOM IDENTIFICATION PANEL SIGN FOR EACH INTERIOR DOOR AS SHOWN ON DRAWINGS A3.9.
J. SIGNS INSIDE THE SECURE PERIMETER. PROVIDE PAINTED GRAPHICS FOR EACH INTERIOR DOOR AS SHOWN ON DRAWINGS A3.9.
K. PASS PROOF THRESHOLD TO BE INSTALLED AT ALL DAYROOM AND DORMITORY DOORS
L. COORDINATE THE SECURITY DRAWINGS AND SPECIFICATIONS WITH BOTH THE COMMERCIAL AND DETENTION DOOR HARDWARE. NOT ALL DOOR CONTROLS ARE SHOWN ON THE SECURITY DRAWINGS.

DOOR AND FRAME SCHEDULE ABBREVIATIONS:

AL	ALUMINUM
CCD	COILING COUNTER DOOR
DHM	DETENTION HOLLOW METAL
DHM-G	DETENTION HOLLOW METAL - GALVANIZED
HM	HOLLOW METAL
HM-G	HOLLOW METAL - GALVANIZED
OCD	OVERHEAD COILING DOOR
SD	SECTIONAL DOOR
STL	STEEL
WD	WOOD
WMP	WIRE MESH PARTITION

GLAZING SCHEDULE - COMMERCIAL

IG-1	1" CLEAR INSULATING LOW-E GLAZING
IG-2	1" INSULATED SPANDREL GLASS
LG-1	LAMINATED GLASS
LG-1F	LAMINATED FIRE-RATED GLASS

GLAZING SCHEDULE - DETENTION:

LP-3	CLEAR LAMINATED POLYCARBONATE
GCP-1	60 MINUTE PHYSICAL ATTACK (SECURE-TEM + POLY SP029)
GCP-1F	60 MINUTE PHYSICAL ATTACK, FIRE-RATED (SECURE-TEM +POLY SP029)
GCP-1M	60 MINUTE PHYSICAL ATTACK; MIRRORED (SECURE-TEM + POLY SP029)
GCP-1MF	60 MINUTE PHYSICAL ATTACK; MIRRORED, FIRE-RATED (SECURE-TEM + POLY)
GCP-2	40 MINUTE PHYSICAL ATTACK (SECURE-TEM + POLY SP029)
GCP-2F	40 MINUTE PHYSICAL ATTACK, FIRE-RATED (SECURE- + POLY SP029)
GCP-2M	40 MINUTE PHYSICAL ATTACK; MIRRORED (SECURE-TEM + POLY SP029)
GCP-2MF	40 MINUTE PHYSICAL ATTACK; MIRRORED, FIRE-RATED (SECURE-TEM + POLY SP029)
GCP-2MLCD	40 MINUTE PHYSICAL ATTACK; MIRRORED, SWITCHABLE LCD PRIVACY SECURITY GLASS (SECURE-TEM + POLY SP029)
GCP-3 (A2)	20 MINUTE PHYSICAL ATTACK (SECURE-TEM + POLY SP029)
GCP-3F	20 MINUTE PHYSICAL ATTACK, FIRE-RATED (SECURE-TEM + POLY)
GCP-3M	20 MINUTE PHYSICAL ATTACK; MIRRORED (SECURE-TEM + POLY SP029)
SIG-2	40 MINUTE LOW-E COATED, CLEAR INSULATING GLASS POLYCARBONATE UNIT

DOOR AND FRAME SCHEDULE COMMENTS:

1. AUTOMATIC DOOR OPERATOR WITH ACTUATOR CONTROLS ON BOTH SIDES OF THE DOOR, REFER TO DRAWINGS FOR LOCATION.
2. INSULATED SECTIONAL DOOR WITH ELECTRIC OPERATOR. REMOTE CONTROL FROM MASTER CONTROL C2004 AND FROM LOCAL KEYED CONTROL SWITCH.
3. INSULATED SECTIONAL DOOR WITH ELECTRIC OPERATOR. LOCAL KEYED CONTROL SWITCH.
4. INSULATED OVERHEAD COILING DOOR WITH ELECTRIC OPERATOR. REMOTE CONTROL FROM MASTER CONTROL C2004.
5. INSULATED OVERHEAD COILING DOOR WITH ELECTRIC OPERATOR. LOCAL CONTROL SWITCH.
6. NOT USED
7. SLIDING DOOR. SCHEDULED DIMENSIONS ARE CLEAR INSIDE OPENING SIZE, EXCLUDING LOCKING PILASTER.
8. MODULAR STEEL CELLS. DOORS, FRAMES AND GLAZING PROVIDED BY MODULAR STEEL CELL MANUFACTURER.
9. PADDED CELL DOOR AND FRAME.
10. LOCATE FOOD PASS ON STOP SIDE OF DOOR. PROVIDE THUMB TURN ON FOOD PASS LOCK.
11. PROVIDE WALL MOUNTED ELECTRIC MAGNETIC DOOR HOLDER; LCN SENTRONIC SEM7830.
12. MAIL SLOT IN DOOR WITH MAIL CATCH.
13. DOOR IS TO RECEIVE 1/3 HOUR MINIMUM FIRE DOOR AND FIRE SHUTTER ASSEMBLY RATING.
14. DOOR GLAZING TO RECEIVE SWITCHABLE LCD PRIVACY SECURITY GLASS, SUPPLY ELECTRIC HINGE AS REQUIRED.
15. FRAME TO RECEIVE SWITCHABLE LCD PRIVACY SECURITY GLASS, REFER TO FRAME ELEVATIONS FOR LOCATION.
16. DOOR GLAZING TO RECEIVE WHITE PATTERN MATRIX.
17. FRAME TO RECEIVE BULLET RESISTANT GLAZING.

DLZ
ARCHITECTURE • ENGINEERING • PLANNING
SURVEYING • CONSTRUCTION SERVICES
DLZ INDIANA, LLC

2022 02-16
ERIC B. RATTS REGISTERED No. AR10500134 STATE OF INDIANA ARCHITECT

NO.	REVISION	DATE
A1	ADDENDUM 1	01/20/22
A2	ADDENDUM 2	02/02/22
A3	ADDENDUM 3	02/16/22

DRAWN: KPK CHK'D: KPK
DESIGNED: EBR
APPRV'D: EBR
DATE: DECEMBER 20, 2021
PROJECT NUMBER 2063-1048-90

SULLIVAN COUNTY SHERIFF'S OFFICE AND CORRECTIONAL FACILITY
2357 NORTH SECTION STREET SULLIVAN, INDIANA 47882

DOOR AND FRAME ELEVATIONS

DRAWING NUMBER
A3.5
ARCHITECTURE

C:\RevitBackups\2020\2063-1048-90 Sullivan County Jail - Arch_zmcgill4TEWM.rvt
2/15/2022 5:45:28 PM