## PRECAST LAYER LEGEND:

- PRECAST TREATMENT 1
- PRECAST TREATMENT 2

## GENERAL NOTES:

1. SEE SHEET A9.4 FOR PRECAST PANEL TYPE ELEVATIONS
2. ALL KEYNOTES INDICATE ONE GRAPHIC REPRESENTATION TYPICAL. CONTRACTOR SHALL USE THE GRAPHICAL REPRESENTATIONS FOR COUNTS AND NOT THE KEYNOTES. THE ABSENCE OF A KEYNOTE DOES NOT ABSOLVE THE CONTRACTOR FROM PROVIDING THE FEATURE GRAPHICALLY SHOWN ON THE DRAWINGS.
3. INTERIOR PRECAST OVERALL ELEVATIONS HAVE BEEN SHOWN WITHOUT PANEL JOINTS OR PENETRATIONS. CONTRACTORS SHALL COORDINATE INTERIOR PANEL JOINTS AND PENETRATIONS WITH THE PRECAST MANUFACTURER.

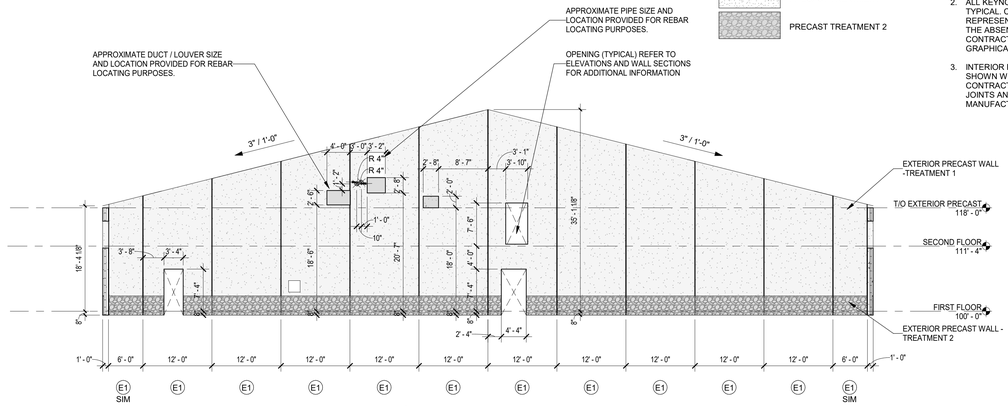


5 **WEST POD ELEVATION - PRECAST PANEL**
SCALE: 3/32" = 1'-0"

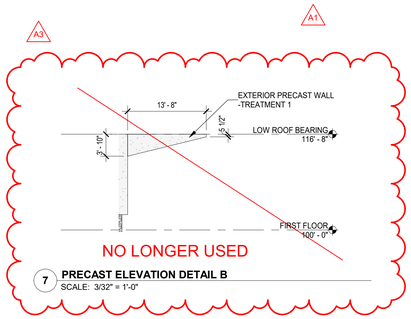


7 **PRECAST ELEVATION DETAIL B**
SCALE: 3/32" = 1'-0"

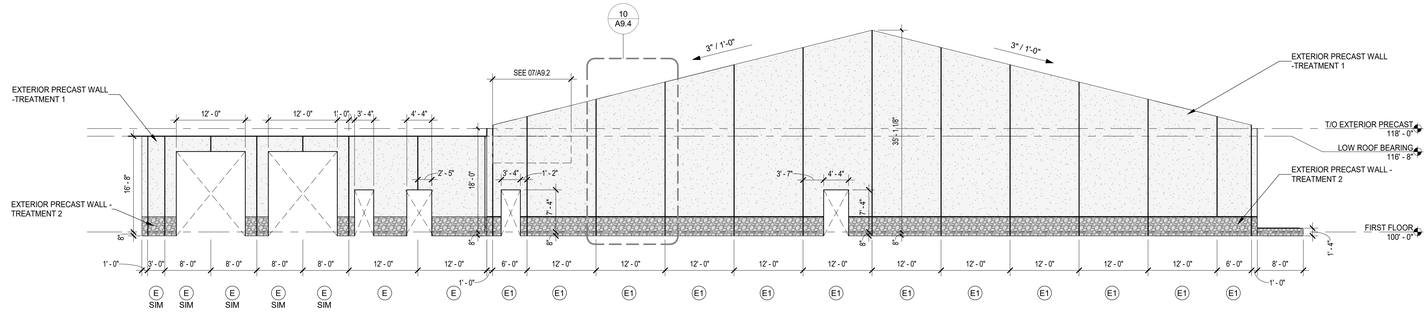


4 **EAST ELEVATION - PRECAST PANEL**
SCALE: 3/32" = 1'-0"

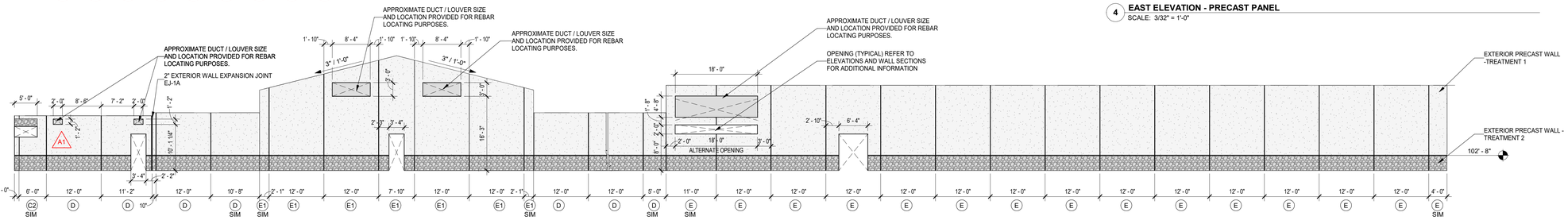


3 **SOUTH ELEVATION - PRECAST PANEL**
SCALE: 3/32" = 1'-0"

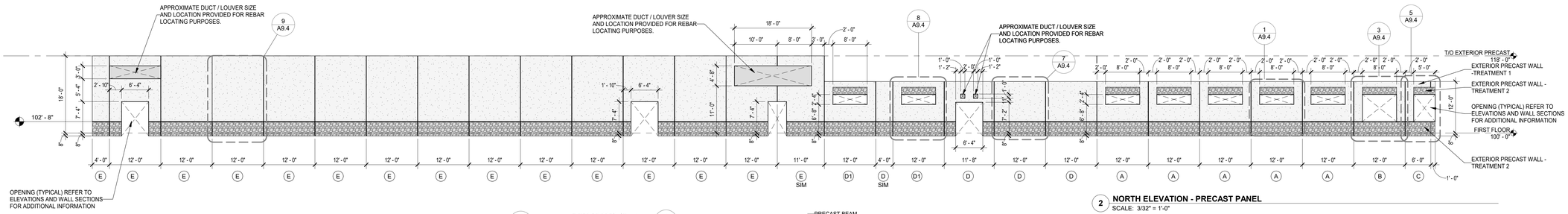


2 **NORTH ELEVATION - PRECAST PANEL**
SCALE: 3/32" = 1'-0"

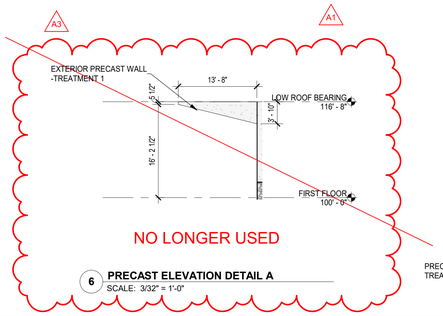


6 **PRECAST ELEVATION DETAIL A**
SCALE: 3/32" = 1'-0"

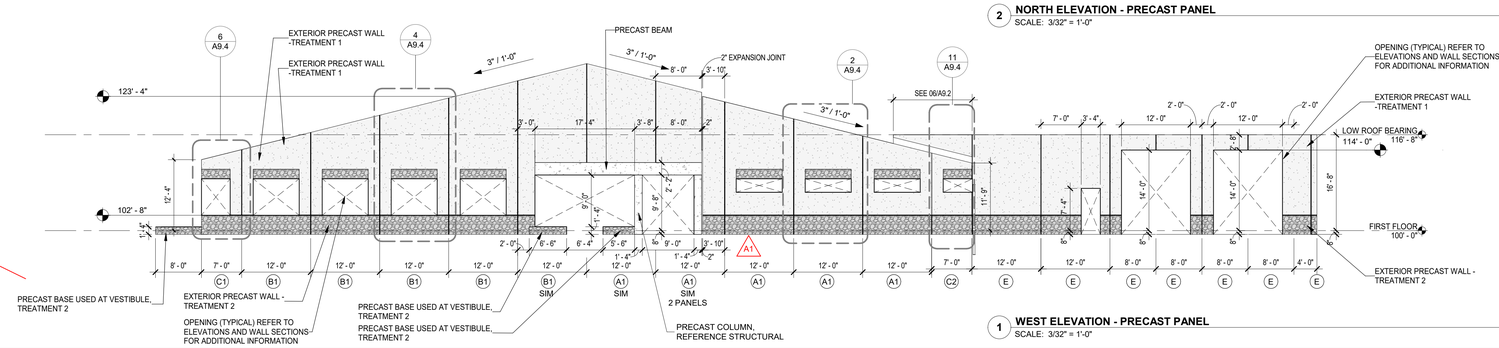


1 **WEST ELEVATION - PRECAST PANEL**
SCALE: 3/32" = 1'-0"

DLZ
ARCHITECTURE • ENGINEERING • PLANNING
SURVEYING • CONSTRUCTION SERVICES
DLZ INDIANA, LLC

2022-02-16
EDIE B. RATTS
STATE OF INDIANA
AR10200104

| NO. | REVISION | DATE |
|---|---|---|
| A1 | ADDENDUM 1 | 01/20/22 |
| A3 | ADDENDUM 3 | 02/16/22 |

DRAWN: JEM CHK'D: KPK
DESIGNED: EBR
APPROVD: EBR
DATE: DECEMBER 20, 2021

PROJECT NUMBER
2063-1048-90

SULLIVAN COUNTY SHERIFF'S OFFICE AND CORRECTIONAL FACILITY
2357 NORTH SECTION STREET SULLIVAN, INDIANA 47882

EXTERIOR PRECAST PANEL ELEVATIONS

DRAWING NUMBER
A9.2

ARCHITECTURE

C:\RevitBackups\2020\2063-1048-90 Sullivan County Jail - Arch_zmcqjll4TEWM.rvt
2/15/2022 5:49:42 PM