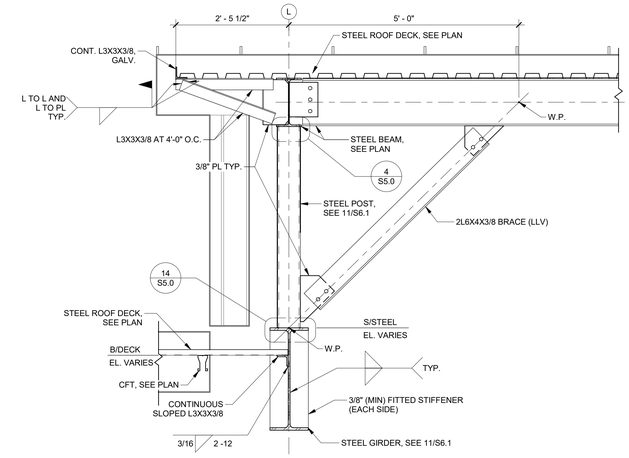


16 **SECTION**
SCALE: 3/4" = 1'-0"

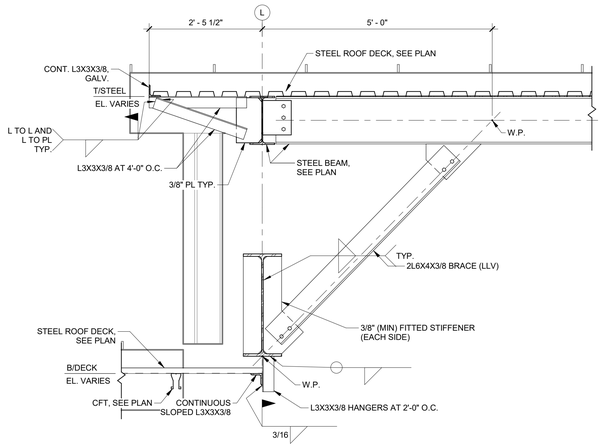


15 **SECTION**
SCALE: 3/4" = 1'-0"

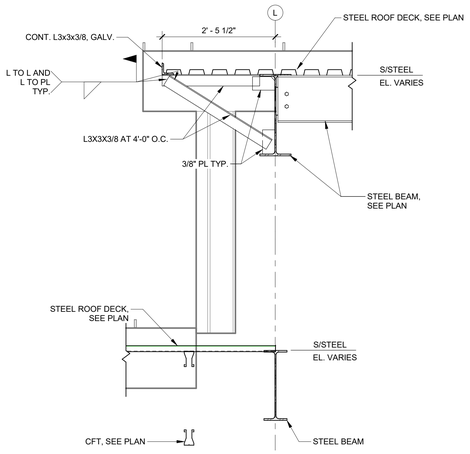


14 **SECTION**
SCALE: 3/4" = 1'-0"

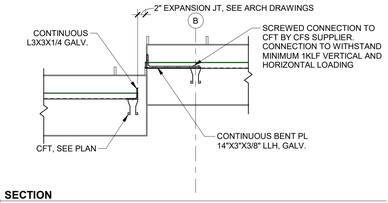


13 **SECTION**
SCALE: 3/4" = 1'-0"

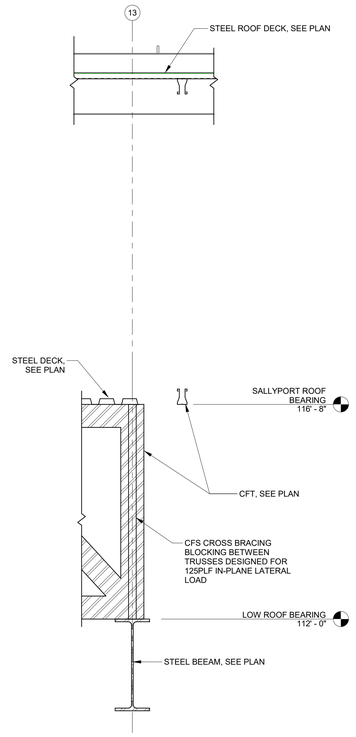


12 **SECTION**
SCALE: 3/4" = 1'-0"

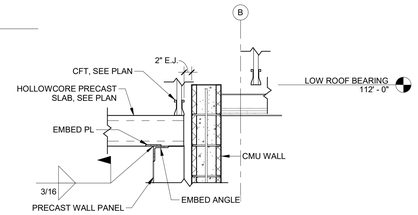


11 **SECTION**
SCALE: 3/4" = 1'-0"

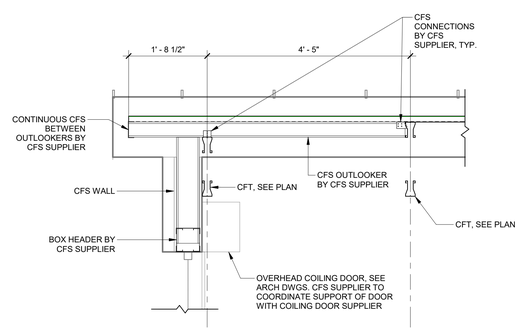


9 **SECTION**
SCALE: 3/4" = 1'-0"

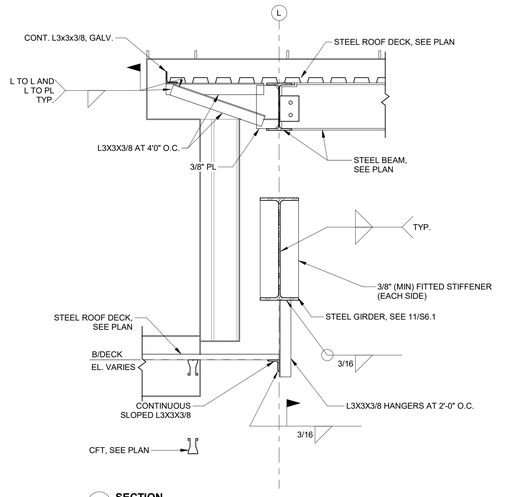


8 **SECTION**
SCALE: 3/4" = 1'-0"

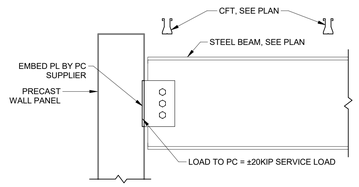


7 **SECTION**
SCALE: 3/4" = 1'-0"

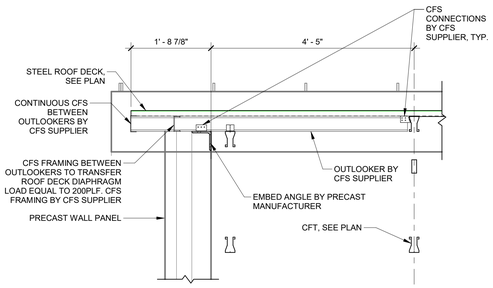


6 **SECTION**
SCALE: 3/4" = 1'-0"

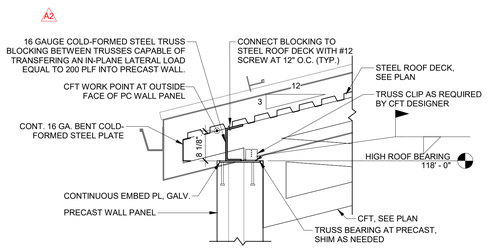


5 **SECTION**
SCALE: 3/4" = 1'-0"

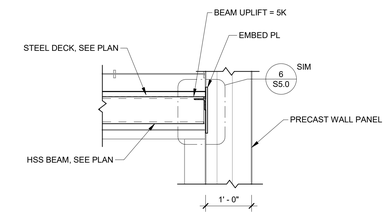


4 **SECTION**
SCALE: 3/4" = 1'-0"

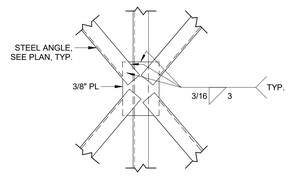


3 **DETAIL**
SCALE: 3/4" = 1'-0"

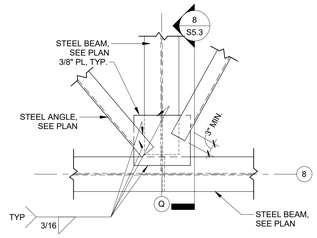


2 **DETAIL**
SCALE: 3/4" = 1'-0"

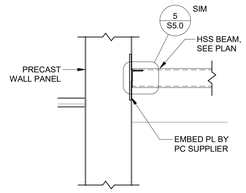


1 **SECTION**
SCALE: 3/4" = 1'-0"

DLZ
ARCHITECTURE • ENGINEERING • PLANNING
SURVEYING • CONSTRUCTION SERVICES
DLZ INDIANA, LLC

2022/02/16
ELLIOTT G. ALLEN
STATE OF INDIANA

| NO. | REVISION | DATE |
|---|---|---|
| A1 | ADDENDUM 1 | 01/20/22 |
| A2 | ADDENDUM 2 | 02/08/22 |
| A3 | ADDENDUM 3 | 02/10/22 |

DRAWN: KJJ CHK'D: EGA
DESIGNED: KJJ
APPRV'D: EGA
DATE: DECEMBER 20, 2021

PROJECT NUMBER
2063-1048-90

SULLIVAN COUNTY SHERIFF'S OFFICE AND CORRECTIONAL FACILITY
2357 NORTH SECTION STREET SULLIVAN, INDIANA 47882

FRAMING DETAILS & SECTIONS - 3

DRAWING NUMBER
S5.4

STRUCTURAL

C:\RevitBackups\2020\2063-1048-90 Sullivan County Jail - Struct_kjackowski43YGV.rvt
2/16/2022 10:27:39 AM