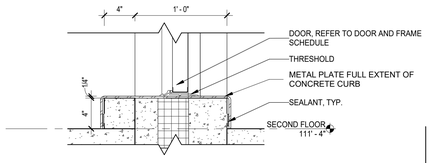


**21A WALL SECTION 21 - INTERIOR - DETAIL A**
SCALE: 1 1/2" = 1'-0"

A1

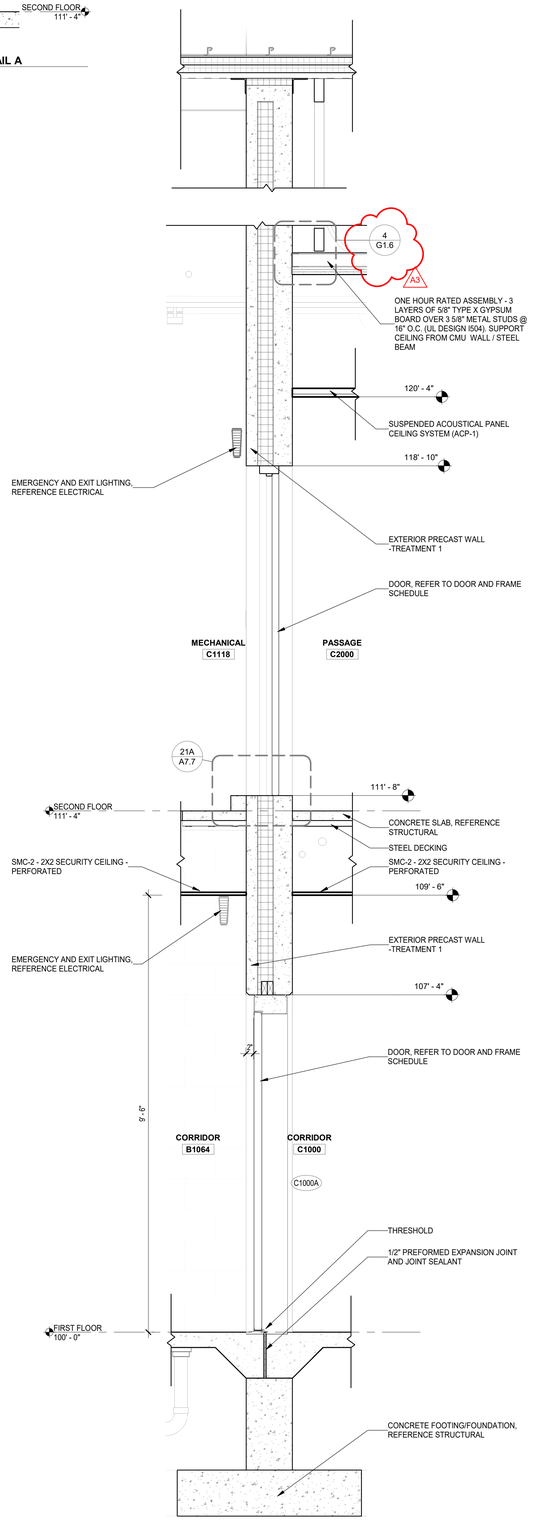


**21 WALL SECTION 21 - INTERIOR**
SCALE: 3/4" = 1'-0"

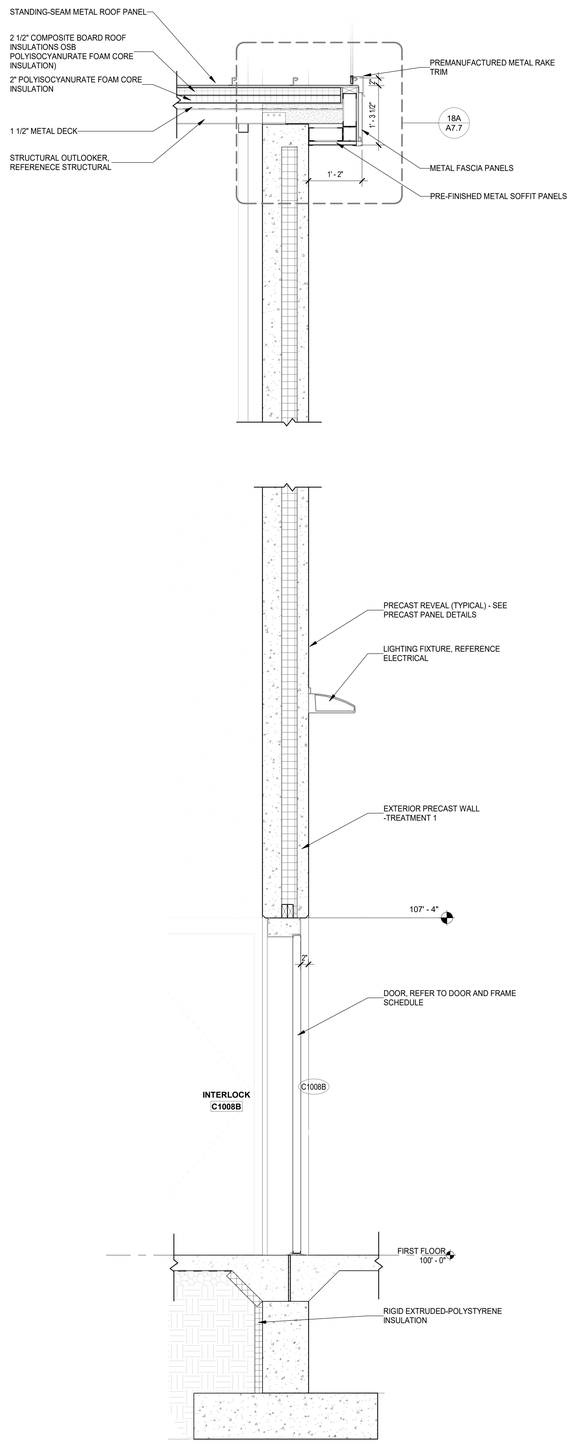


**20 WALL SECTION 20 - INTERLOCK C1008**
SCALE: 3/4" = 1'-0"

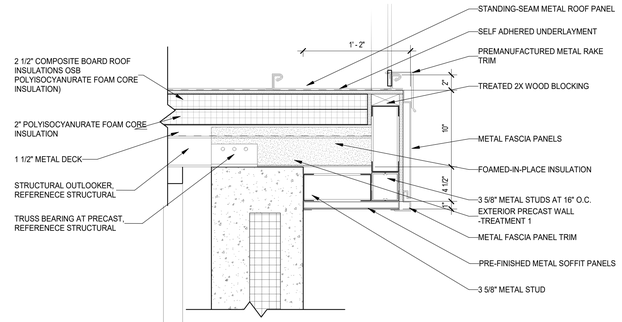


**18A WALL SECTION 20 - INTERLOCK C1008 - DETAIL A**
SCALE: 1 1/2" = 1'-0"

## GENERAL NOTES:

A. ALL KEYNOTES INDICATE ONE GRAPHIC REPRESENTATION TYPICAL. CONTRACTOR SHALL USE THE GRAPHICAL REPRESENTATIONS FOR COUNTS AND NOT THE KEYNOTES. THE ABSENCE OF A KEYNOTE DOES NOT ABSOLVE THE CONTRACTOR FROM PROVIDING THE FEATURE GRAPHICALLY SHOWN ON THE DRAWINGS.
B. REFER TO G1.1 FOR ADDITIONAL GENERAL NOTES AND INFORMATION.
C. REFER TO G1.2 FOR STANDARD AND ADA MOUNTING HEIGHTS AND ABBREVIATIONS.
D. COORDINATE WITH M.E.P. FOR ANY BULKHEADS, POWER, DATA, OR EQUIPMENT REQUIREMENTS.
E. DIMENSIONS TO EXTERIOR FACES OF BUILDING ARE TO THE OUTSIDE OF THE MASONRY VENEER AND PRECAST PANELS.
F. DIMENSIONS OF INTERIOR WALLS ARE TO FACE OF METAL STUD, CMU, OR PRECAST.
G. REFER TO PARTITION SCHEDULE ON SHEET G1.10.
H. FOR KITCHEN COMPONENTS REFER TO KITCHEN PLANS

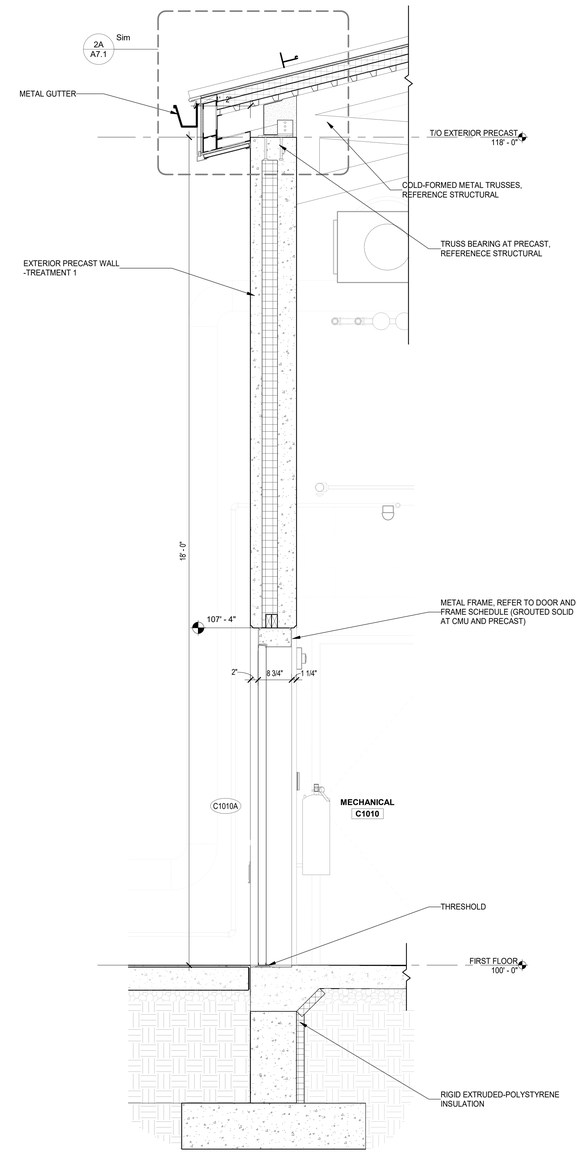


**19 WALL SECTION 19 - MECHANICAL C1010**
SCALE: 3/4" = 1'-0"

DLZ
ARCHITECTURE • ENGINEERING • PLANNING
SURVEYING • CONSTRUCTION SERVICES
DLZ INDIANA, LLC

2022.02.16
ERIC B. RATTS
STATE OF INDIANA

| NO. | REVISION | DATE |
|---|---|---|
| A1 | ADDENDUM 1 | 01/20/22 |
| A3 | ADDENDUM 3 | 02/16/22 |

DRAWN: KPK CHK'D: KPK
DESIGNED: EBR
APPRV'D: EBR
DATE: DECEMBER 20, 2021

PROJECT NUMBER
2063-1048-90

SULLIVAN COUNTY SHERIFF'S OFFICE AND CORRECTIONAL FACILITY
2357 NORTH SECTION STREET SULLIVAN, INDIANA 47882

WALL SECTIONS - UNIT C

DRAWING NUMBER
A7.7

ARCHITECTURE

C:\Revit\Backups\2020\2063-1048-90 Sullivan County Jail - Arch_zmcglil4TEWM.rvt
2/15/2022 5:47:46 PM