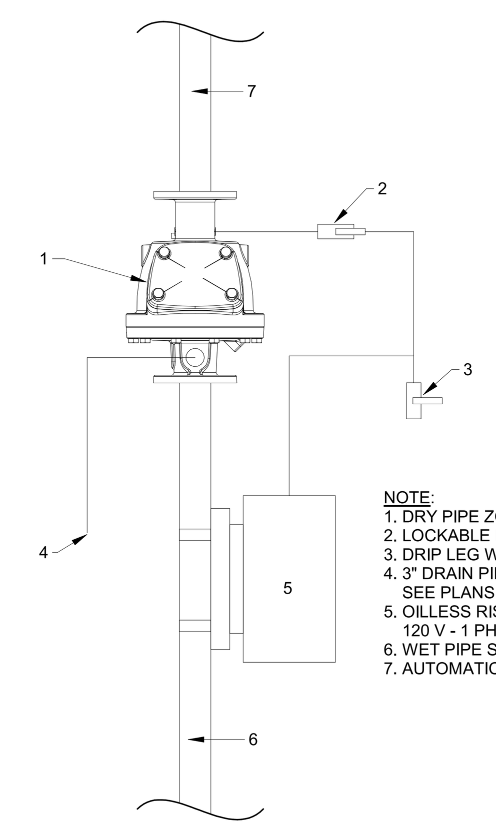

NOTE:
1. DRY PIPE ZONE VALVE.
2. LOCKABLE BALL VALVE.
3. DRIP LEG WITH LOCKABLE BALL VALVE.
4. 3" DRAIN PIPE TO FLOOR SINK IN NEARBY CHASE. SEE PLANS FOR LOCATION.
5. OILLESS RISER MOUNTED AIR COMPRESSOR. 120 V - 1 PHASE - 1/3 HP
6. WET PIPE SUPPLYING DRY PIPE SYSTEM.
7. AUTOMATIC SPRINKLER DRYP PIPE SYSTEM PIPING.

2 DRY PIPE DETAIL
SCALE: N.T.S.

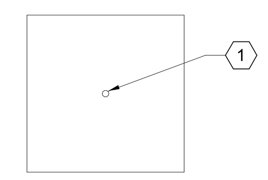

CEILING PANEL DETAIL

(2'-0" X 2'-0")

1 LOCATE SPRINKLER AT THE CENTER OF THE CEILING PANEL

NOTE:
REFER TO ARCHITECTURAL REFLECTED CEILING PLANS FOR CEILING TYPES.

ABBREVIATIONS

DN	DOWN
DP	DRY PIPE PIPING
DWG	DRAWING
CONT	CONTINUATION
F	FIRE WATER SUPPLY
FDC	FIRE DEPARTMENT CONNECTION
FHV	FIRE HOSE VALVE
SD	SPRINKLER DRAIN
OS&Y	OUTSIDE SCREW & YOKE
TYP	TYPICAL
WP	WET PIPE

SYMBOLS

FDP	DRY PIPE
F	FIRE WATER SUPPLY
FDC	FIRE DEPARTMENT CONNECTION PIPING
FPA	PRE ACTION PIPE
SP	STAND PIPE
FPW	WET PIPE
	PIPING: DOWN
	PIPING: UP
	PIPE CONTINUATION
	WATER FLOW INDICATOR
	DIRECTION OF FLOW
	UNION
	CHECK VALVE
	OS&Y VALVE WITH TAMPER SWITCH
	GATE OR BUTTERFLY VALVE WITH TAMPER SWITCH
	DRAIN/TEST VALVE
	DOUBLE CHECK BACKFLOW PREVENTER
	SIGHT GLASS
	FIRE DEPARTMENT SIAMESE CONNECTION

FIRE PROTECTION BASIS OF DESIGN

OCCUPANCY / CONSTRUCTION TYPE	- A3, B, I3, S1 & S2 / IIB
GPMxSF REQUIRED	- 0.10x1500 & 0.15x1500
SPRINKLER DURATION	- 30 MINUTES
MAXIMUM AREA PER ZONE	- 52,000SF
FLOW ZONE WITH HOSE CONNECTION	- 325 GPM

FLOW TEST DATA

DATE:	- Febuary 26, 2021
PERORMED BY:	- Shelburn Water
STATIC PRESSURE:	- 55
MEASURED FLOW:	- 750
RESIDUAL PRESSURE AT RESIDUAL FLOW:	- 20

FIRE PROTECTION GENERAL NOTES

1. THE BUILDING SHALL BE PROTECTED WITH A WET AND DRY PIPE, AND PRE-ACTION SPRINKLER SYSTEM AS NOTED ON THE DRAWINGS.
2. THE WET PIPE SPRINKLER SYSTEM SHALL BE HYDRAULICALLY DESIGNED. DESIGN DENSITIES AND SPRINKLER HEAD COVERAGE ARE LISTED IN DIVISION 21 SPECIFICATIONS.
3. HYDRAULIC CALCULATIONS SHALL BE PREPARED IN ACCORDANCE WITH THE NFPA-13 STANDARD.
4. ALL PIPING SHALL BE CONCEALED IN AREAS WITH FINISHED CEILINGS.
5. ALL FLOW TEST DRAINS SHALL BE PIPED TO A SUITABLE DRAIN THAT DISCHARGES TO THE EXTERIOR OF THE BUILDING OR AS INDICATED ON THE DRAWINGS.
6. AUXILIARY DRAINS SHALL BE PROVIDED, WHERE REQUIRED, FOR SYSTEM DRAINAGE.
7. THE FIRE PROTECTION DEVICES SHALL BE CONNECTED TO THE BUILDING FIRE ALARM SYSTEM.
8. COORDINATE FIRE SPRINKLER WORK WITH ARCHITECTURAL (REFLECTED CEILING PLAN), ELECTRICAL (LIGHTING), HVAC (DUCTWORK AND PIPING), AND PLUMBING, BEFORE COMMENCING WORK.
9. ALL SYSTEM CONTROL VALVES SHALL BE ELECTRICALLY SUPERVISED.
10. CONTRACTOR SHALL FURNISH AND INSTALL ALL MATERIALS, LABOR COSTS, PERMIT FEES AND EQUIPMENT REQUIRED FOR, OR INCIDENTAL TO THE INSTALLATION OF A COMPLETE AND OPERATIONAL SPRINKLER SYSTEM, AS INDICATED IN THE CONTRACT DOCUMENTS.
11. CONTRACTOR SHALL PREPARE AND SUBMIT SPRINKLER PLANS AND PRODUCT DATA SHEETS THAT CONTAIN SUFFICIENT DETAIL FOR THE AUTHORITIES HAVING JURISDICTION TO EVALUATE THE HAZARD AND EFFECTIVENESS OF THE SPRINKLER SYSTEM.
12. INSTALLATION OF THE FIRE SUPPRESSION SYSTEM SHALL BE IN ACCORDANCE WITH NFPA STANDARDS, THE STATE OF INDIANA FIRE CODE, AND OTHER LOCAL FIRE CODE AUTHORITY HAVING JURISDICTION.
13. HYDRAULIC CALCULATIONS AND SHOP DRAWINGS SUBMITTALS SHALL BE SIGNED AND STAMPED BY A QUALIFIED FIRE PROTECTION PROFESSIONAL ENGINEER IN THE STATE OF THE PROJECT.
14. ANY CONFLICTS WHICH OCCUR DUE TO LACK OF COORDINATION OF THE SPRINKLER CONTRACTOR WITH OTHER DIVISIONS SHALL BE CORRECTED BY THE SPRINKLER CONTRACTOR WITH NO FURTHER EXPENSE TO OWNER.
15. SPRINKLER SYSTEM SHALL BE TESTED IN ACCORDANCE WITH THE NFPA-13 AND BY THE AUTHORITY HAVING JURISDICTION BEFORE COMMISSIONING THE SPRINKLER SYSTEMS.
16. SHUT-OFF TYPE VALVES LOCATED ABOVE THE CEILINGS SHALL BE WITHIN 36" OF THE CEILING LEVEL.
17. CONTRACTOR SHALL PROVIDE ACCESS DOORS, WHETHER SPECIFICALLY IDENTIFIED ON THE SHEETS OR NOT, IN ALL WALL AND CEILINGS WHERE SERVICE OR ADJUSTMENT TO FIRE PROTECTION ITEMS MAY BE REQUIRED. ACCESS DOORS SHALL BE OF AN APPROPRIATE SIZE REQUIRED FOR EACH APPLICATION. WHERE APPLICABLE, ACCESS DOORS SHALL MATCH THE FIRE / SECURITY RATING OF THE WALL / CEILING ASSEMBLY.
18. INDICATED SQUARE FOOTAGES ARE APPROXIMATE. REFER TO ARCHITECTURAL DRAWINGS FOR PLAN DIMENSIONS.
19. ALL FIRE PROTECTION SPRINKLER PIPING SHALL BE INSTALLED TO DRAIN BACK TO ALARM VALVES OR DRAIN STATIONS.
20. PIPE ROUTINGS ARE DIAGRAMATIC. CONTRACTOR IS RESPONSIBLE FOR REVIEW OF ARCHITECTURAL DRAWINGS FOR UNDERSTANDING OF CEILING CONDITIONS AND WHERE PIPING IS ROUTED TO REMAIN CONCEALED IN OCCUPIED AREAS.
21. CONTRACTOR TO COORDINATE WITH DIVISION 13 SPECIFICATION FOR PREFABRICATION CELLS. LOCATIONS AND CONNECTION SIZES TO PROVIDED AS PART OF CELLS TO BE COORDINATED WITH PREFABRICATED CELL PROVIDER.
22. CONTRACTOR TO COORDINATE COLD-FORMED STEEL TRUSSES WITH THE ROUTING AND HANGER/SUPPORTS OF ALL MECHANICAL, ELECTRICAL, PLUMBING, SECURITY ELECTRONICS AND FIRE PROTECTION THROUGH BIM COORDINATION MODELING PRIOR TO ANY FABRICATION. ROUTING OF TRADES ELEMENTS SHOWN ON PLANS AND ANY TRUSS WEBS SHOWN IN BUILDING SECTIONS ARE DIAGRAMMATIC AND MUST BE COORDINATED WITH COLD-FORMED STEEL TRUSS SUPPLIER AND THEIR STRUCTURAL TRUSS ELEMENT REQUIREMENTS. TRADES TO PROVIDE HANGING LOADS TO TRUSS DELEGATED DESIGNER, MODIFICATION OF HANGER/SUPPORTS FOR TRADES INCLUDE BUT IS NOT LIMITED TO ADJUSTING SPACING OF HANGERS/SUPPORTS AND/OR ADJUSTING SUPPORTS TO EXTEND TO ADJACENT WALL SURFACES. THIS SHALL BE DONE AT NO ADDITIONAL COST TO THE OWNER. (A3)
23. ALL FIRE PROTECTION SPRINKLER PIPING SHALL BE INSTALLED TO NOT BE ROUTED OVER ELECTRICAL EQUIPMENT.

FIRE PROTECTION BACKFLOW PREVENTER SCHEDULE

TAG	DESCRIPTION	MANUFACTURER	REMARKS
DCV-1	DOUBLE CHECK VALVE DETECTOR ASSEMBLY BACKFLOW PREVENTER - MAIN BODY AND ACCESS COVER SHALL BE EPOXY COATED DUCTILE IRON (ASTM A 536 GRADE 4). THE SEAT RING AND CHECK VALVE SHALL BE NORYL, THE STEM SHALL BE STAINLESS STEEL AND THE SEAT DISC ELASTOMERS SHALL BE EPDM, OS&Y SHUT-OFF VALVES.	ZURN / WILKINS MODEL: 350 ADA	5 PSI LOSS @ 325 GPM INSTALL PER MANUFACTURER REQUIREMENTS.

FIRE PROTECTION EQUIPMENT SCHEDULE

TAG		DESCRIPTION	EQUIPMENT	BASIS OF DESIGN	VOLTAGE	PHASE	REMARKS
PA	1	4" DOUBLE INTERLOCK PACKAGE SYSTEM WITH SHUT-OFF VALVE, SIGHT GLASS ASSEMBLY, 1/2 HP AIR COMPRESSOR, CONTROLS AND COMPLETE TRIM. OPERATES IN NON-POWERED SITUATION.	PREACTION SYSTEM	FIREFLEX SUREFIRE MODEL: T3SFDOWP40	115	1	INSTALL PER MFGR REQUIREMENTS. SEE DETAIL 3/FP0.1.
PA	2	1-1/2" DOUBLE INTERLOCK PACKAGE SYSTEM WITH SHUT-OFF VALVE, SIGHT GLASS ASSEMBLY, 1/6 HP AIR COMPRESSOR, CONTROLS AND COMPLETE TRIM. OPERATES IN NON-POWERED SITUATION.	PREACTION SYSTEM	FIREFLEX SUREFIRE MODEL: T3SFDOWP40	115	1	INSTALL PER MFGR REQUIREMENTS. SEE DETAIL 3/FP0.1.

FIRE
↓
HEAT DETECTOR OR MANUAL PULL STATION INITIATES SIGNAL TO CONTROL PANEL
↓
CONTROL PANEL INITIATES:
1. ALARM SIGNAL TO BUILDING F.A.C.P.
2. SIGNAL TO THREE SHUNT-TRIP PANEL BREAKERS.
3. RELEASE DELUGE VALVES SOLENOID SYSTEM TO FILL WITH WATER.
↓
MELTS FUSIBLE LINK AT SPRINKLER HEAD
↓
MELTING OF LINK RELEASES WATER AT THE SPRINKLER HEAD
↓
THE FLOW OF WATER IN THE SYSTEM ACTIVATES FLOW DEVICES
↓
SOUNDING ALARM SYSTEM

PREACTION SYSTEM
OPERATIONAL DIAGRAM

FIRE
↓
MELTS FUSIBLE LINK AT SPRINKLER HEAD
↓
MELTING OF THE LINK RELEASES AIR TO THE ATMOSPHERE
↓
DRY PIPE VALVE IS OPERATED BY WATER PRESSURE AND WATER FLOWS TO ANY OPERATED SPRINKLER HEADS
↓
SOUNDING ALARM SYSTEM

DRY PIPE SYSTEM
OPERATIONAL DIAGRAM

FIRE
↓
MELTS FUSIBLE LINK AT SPRINKLER HEAD
↓
MELTING OF THE LINK RELEASES WATER AT THE SPRINKLER HEAD
↓
THE FLOW OF WATER IN THE SYSTEM ACTIVATES FLOW DEVICES
↓
SOUNDING ALARM SYSTEM

WET PIPE SYSTEM
OPERATIONAL DIAGRAM

NOTE: NOT EVERY KEYNOTE IS APPLICABLE TO EVERY DRAWING SHEET.

FIRE PROTECTION KEYNOTES - MASTER INDEX

211001	REFER TO SHEET G1.6 FOR LOCATION OF 1 HOUR RATED CEILING ASSEMBLY.
211301	REFER TO SITE / CIVIL FOR CONTINUATION.
211302	WET PIPE ZONE VALVE ASSEMBLY WITH TAMPER SWITCH.
211303	CHECK VALVE.
211304	FLOW SWITCH.
211305	THREADED TEST AND DRAIN ASSEMBLY.
211306	PRESSURE GAUGE.
211307	2-1/2" DRAIN TO EXTERIOR. PROVIDE TURNDOWN WITH A 45 DEGREE BEND.
211308	BALL VALVE.
211311	FLOOR SINK. REFER TO PLUMBING PLANS FOR ADDITIONAL DETAILS.
211312	PROVIDE HIGH TEMPERATURE HEAD(S) TO PROTECT SKYLIGHT PER NFPA-13 REQUIREMENTS.
211313	PROVIDE HIGH TEMPERATURE SPRINKLER HEAD(S). COORDINATE SPRINKLER HEAD CONFIGURATION WITH ELECTRICAL / IT / SECURITY EQUIPMENT AS SHOWN ON RESPECTIVE DRAWINGS.
211315	SEE FOOD SERVICE DRAWINGS FOR HOOD FIRE PROTECTION REQUIREMENTS.
211316	PROVIDE PIPING WITH BLIND CAP FOR FUTURE EXPANSION.
211317	PROVIDE WET PIPE ZONE VALVE ASSEMBLY WITH TAMPER SWITCH AND BLIND CAP FOR FUTURE BUILD-OUT.
211320	ALL PIPING LAYOUTS TO BE COORDINATED WITH LADDER TO MEET REQUIRED CLEARANCES FOR PERSONNEL ACCESS.
211321	FIRE FIGHTER SMOKE CONTROL PANEL LOCATION.
211322	CONNECT SPRINKLER PIPING IN CHASE TO PIPE CONNECTION AT EACH CELL PROVIDED BY CELL MANUFACTURER. CONTRACTOR TO COORDINATE REQUIRED SRINKLER HEAD LOCATINS WITH CELL MANUFACTURER.
211324	PROVIDE BLIND PIPE CAP(S) AND SHUT-OFF VALVE(S) FOR FUTURE BUILD-OUT.
211325	PROVIDE SIDEWALL SINPRINKLER HEADS IN VESTIBULE.
211326	COORDINATE PIPE ROUTING WITH STRUCTURE IN TIGHT CEILING SPACE.
211401	DRY PIPE SPRINKLER VALVE AND COMPRESSOR. SEE DETAIL 2/FP0.1.
211402	PROVIDE DRY BARREL, FREEZE PROOF SPRINKLER HEAD(S) WITH RISER INTENDED FOR USE WITH KITCHEN FREEZER AND COOLERS.
211403	LOCATE SPRINKLER HEADS BELOW OVERHEAD DOORS AS REQUIRED.

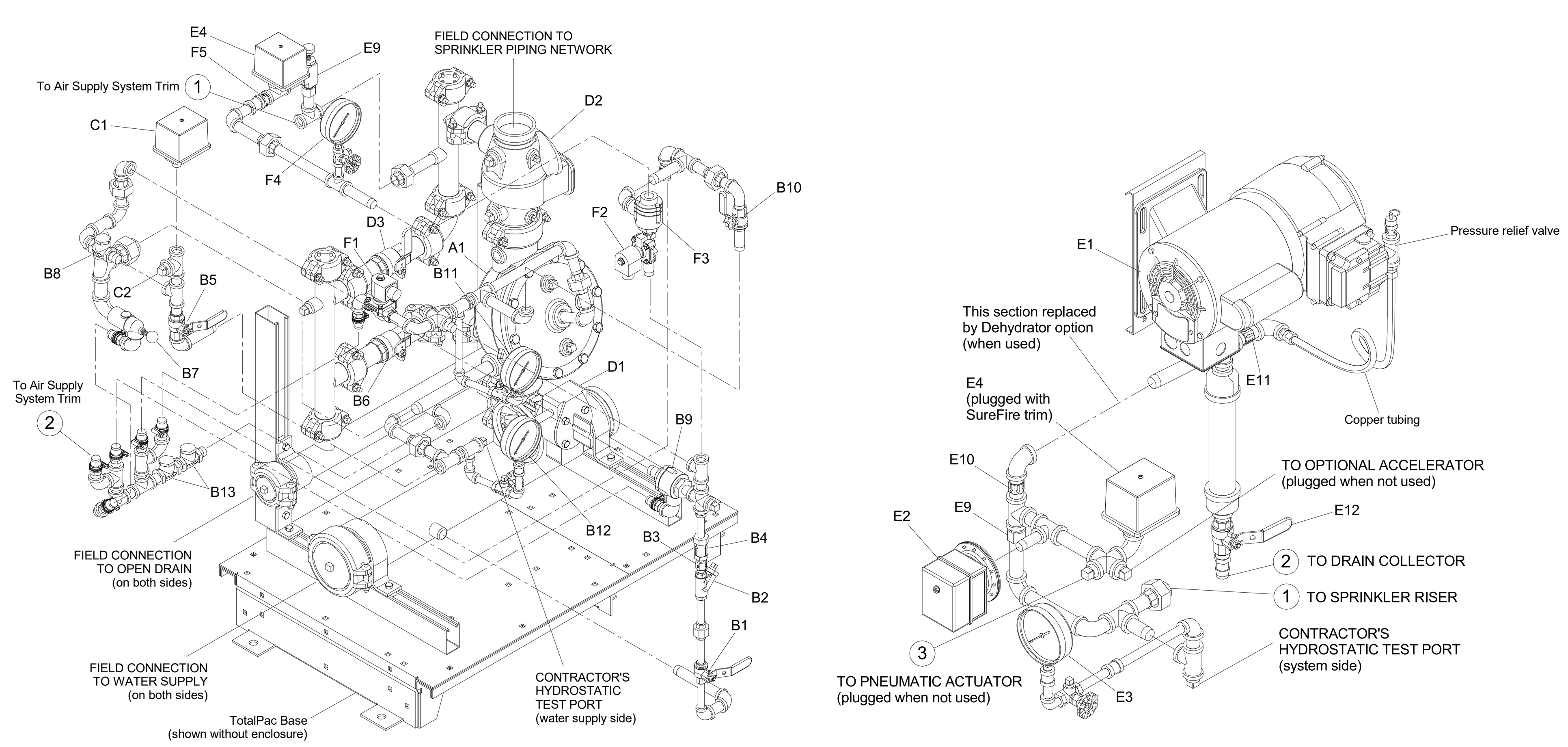

TRIM COMPONENTS:

A1	DELUGE VALVE	C1	ALARM PRESSURE SWITCH
B1	PRIMING VALVE	C2	CONNECTION TO WATER MOTOR GONG (STRAINER SUPPLIED BY CONTRACTOR)
B2	STRAINER	D1	WATER SUPPLY CONTROL VALVE
B3	1/16" RESTRICTED ORIFICE	D2	RISER CHECK VALVE
B4	SPRING LOADED CHECK VALVE	D3	MAIN DRAIN VALVE
B5	ALARM TEST VALVE	E4	AIR SUPERVISORY PRESSURE SWITCH
B6	FLOW TEST VALVE	E9	FLOAT-CHECK ASSEMBLY
B7	DRIP CHECK VALVE	F1	N.C. SOLENOID VALVE - 24Vdc
B8	DRAIN CHECK VALVE	F2	N.O. SOLENOID VALVE - 24Vdc
B9	PRESSURE OPERATED RELIEF VALVE (PORV)	F3	PNEUMATIC ACTUATOR
B10	EMERGENCY RELEASE VALVE	F4	PNEUMATIC ACTUATOR PRESSURE GAUGE
B11	PRIMING PRESSURE WATER GAUGE & VALVE	F5	5/64" RESTRICTED ORIFICE
B12	WATER SUPPLY PRESSURE GAUGE & VALVE		
B13	CLAPPER CHECK VALVE		

3 PREACTION SYSTEM TRIM DIAGRAM
SCALE: N.T.S.

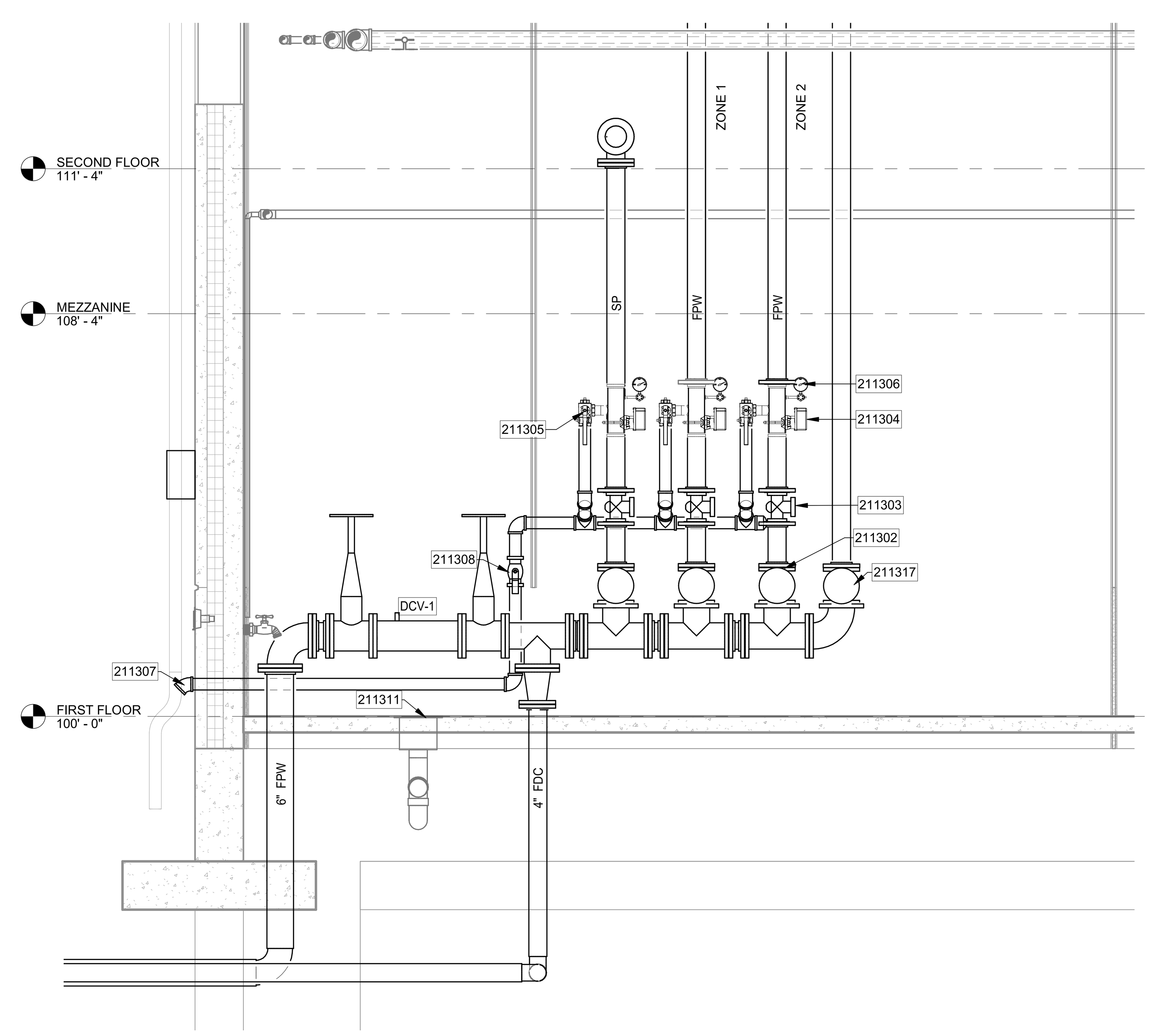

1 FIRE PROTECTION ENTRANCE AND ZONE VALVES SECTION
SCALE: 1/2" = 1'-0"

DLZ ARCHITECTURE • ENGINEERING • PLANNING SURVEYING • CONSTRUCTION SERVICES
DLZ INDIANA, LLC

JOSHUA R. APLING REGISTERED PE 10910274 STATE OF INDIANA PROFESSIONAL ENGINEER
2/16/22

NO.	REVISION	DATE
A3	ADDENDUM 3	02/16/22

DRAWN: DWB CHK'D: ESA
DESIGNED: SJS
APPRV'D: JRA
DATE: DECEMBER 20, 2021
PROJECT NUMBER 2063-1048-90

SULLIVAN COUNTY SHERIFF'S OFFICE AND CORRECTIONAL FACILITY
2357 NORTH SECTION STREET SULLIVAN, INDIANA 47882

GENERAL NOTES, SYMBOLS, AND ABBREVIATIONS

DRAWING NUMBER
FP0.1
FIRE PROTECTION

C:\RevitBackups\2020\2063-1048-90 Sullivan County Jail - Mech_ssandersSTL9A.rvt
2/15/2022 6:04:13 PM