DIAGONAL BAR SCHEDULE (2 E.F.)					
WALL THICKNESS	OPENING SIZE (INCH)				
	<24	<36	<48	<60	>60
<16	#5x3'-0"	#5x4'-0"	#5x4'-0"	#6x4'-6"	#6x4'-6"
<32	#6x3'-0"	#6x4'-0"	#6x4'-0"	#7x4'-6"	#7x4'-6"
<48	#6x3'-0"	#6x4'-0"	#7x4'-6"	#7x4'-6"	#8x5'-0"
<60	#7x3'-6"	#7x4'-6"	#7x4'-6"	#8x5'-0"	#8x5'-0"
>60	#7x3'-6"	#7x6'-6"	#8x5'-0"	#8x5'-0"	#9x6'-0"

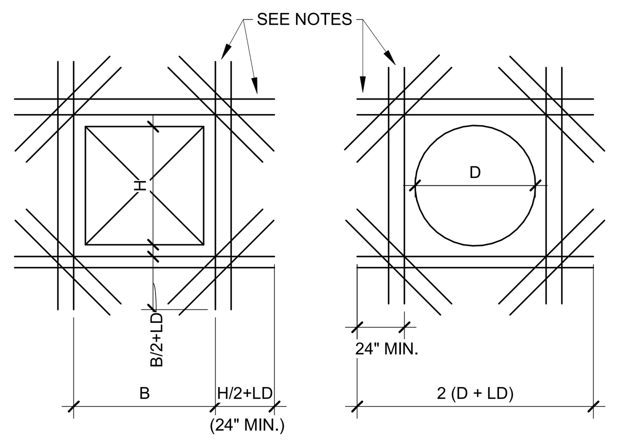

NOTES:
1. THESE DETAILS APPLY TO ALL OPENINGS WHERE REINFORCEMENT IS INTERSECTED IN CAST-IN-PLACE CONCRETE WALLS OR SLABS UNLESS NOTED OTHERWISE ON THE DRAWINGS.
2. THE AREA OF ADDITIONAL REINFORCEMENT REQUIRED IN EACH FACE ON EACH SIDE OF THE OPENING SHALL BE A MINIMUM OF 50% OF THE AREA OF BARS CUT IN EACH FACE IN EACH DIRECTION, RESPECTIVELY.
3. LD=DEVELOPMENT LENGTH.
4. SEE CIVIL, MECHANICAL, PLUMBING, AND ELECTRICAL DRAWINGS FOR FOUNDATION WALL PENETRATION SIZES, LOCATIONS, AND ELEVATIONS NOT NOTED. COORDINATE WITH OTHER TRADES.

22 REINFORCING AROUND OPENING IN CAST-IN-PLACE CONCRETE
SCALE: NTS

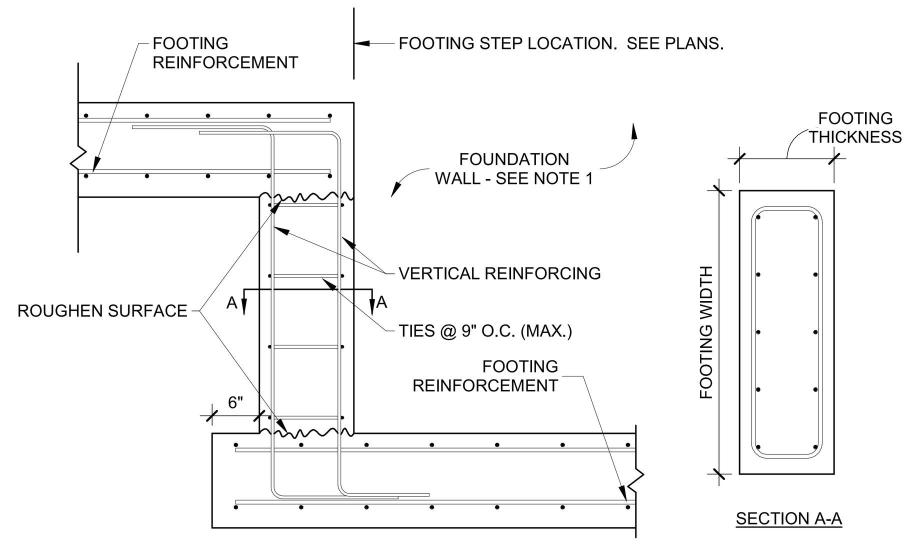

NOTE:
1. REINFORCING THROUGH FOUNDATION WALL SHALL MATCH ADJACENT FOUNDATION WALL REINFORCING. WHEN ADJACENT FOUNDATION WALL DOES NOT EXIST, I.E. INTERIOR FOOTING LOCATIONS AS NOTED, PROVIDE MINIMUM OF #5@10" O.C. EACH FACE VERTICALLY AND HORIZONTALLY WITH THE FOUNDATION WALL BETWEEN STEPS EQUAL IN THICKNESS TO THE SUPPORTED WALL THICKNESS. HOOK BAR ENDS WITH 90 DEG. ACI STD HOOKS.

21 STEPPED FOOTING DETAIL (3' MIN)
SCALE: NTS

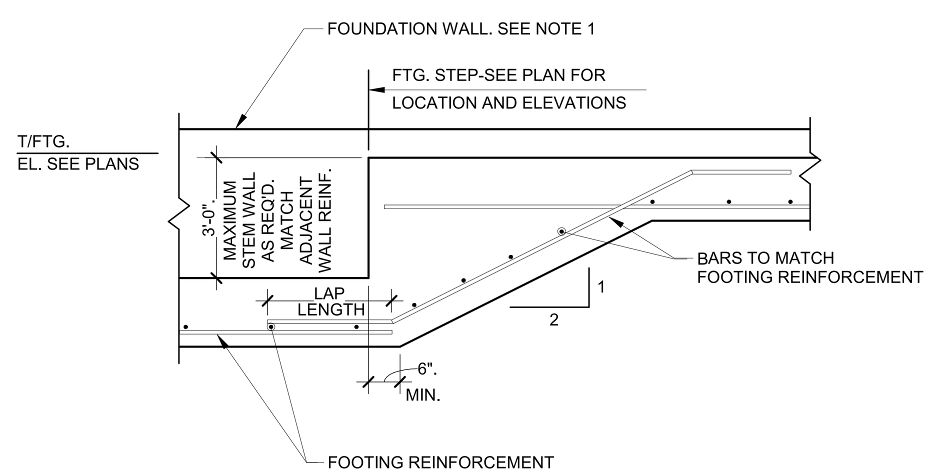

NOTE:
1. REINFORCING THROUGH FOUNDATION WALL SHALL MATCH ADJACENT FOUNDATION WALL REINFORCING. WHEN ADJACENT FOUNDATION WALL DOES NOT EXIST, I.E. INTERIOR FOOTING LOCATIONS AS NOTED, PROVIDE MINIMUM OF #5@12" O.C. EACH FACE VERTICALLY AND HORIZONTALLY WITH THE FOUNDATION WALL BETWEEN STEPS EQUAL IN THICKNESS TO THE SUPPORTED WALL THICKNESS. HOOK BAR ENDS WITH 90° ACI STD HOOKS.

20 STEPPED FOOTING DETAIL (3' MAX)
SCALE: NTS

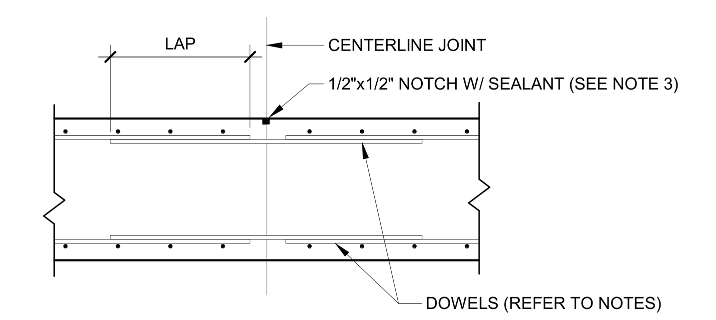

NOTES:
1. DOWELS TO MATCH AND LAP 50% OF HORIZONTAL STEEL.
2. IN LIEU OF USING DOWELS 50% OF HORIZONTAL STEEL MAY EXTEND THRU AND LAP WITH OTHER REINFORCING STEEL.
3. NOTCH AND SEALANT TO BE PROVIDED ON ALL EXPOSED CONCRETE FACES.
4. SPACE CONTROL JOINTS AT A MAXIMUM SPACING OF 30'-0"

19 TYPICAL WALL CONTROL JOINT DETAIL
SCALE: NTS

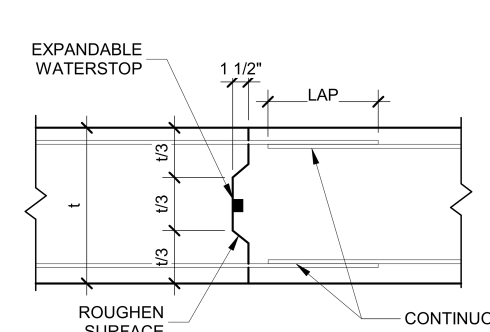

18 CONCRETE WALL OR FOOTING CONSTRUCTION JOINT DETAIL
SCALE: NTS

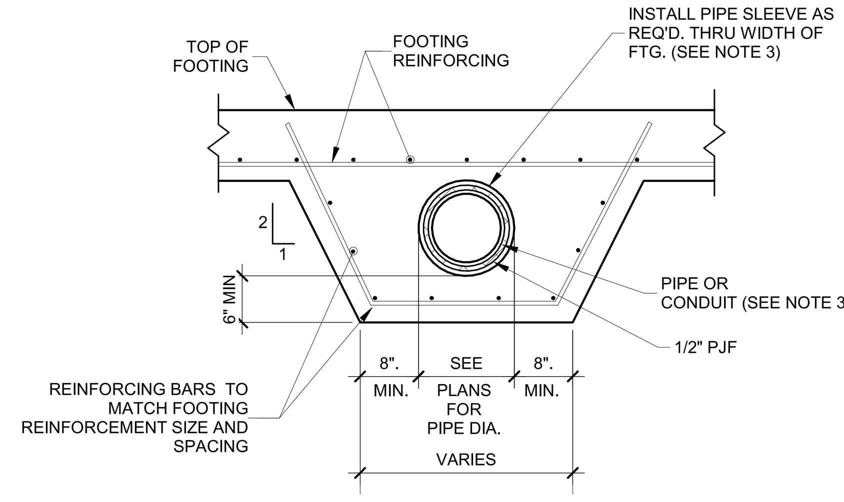

NOTES:
1. SEE MECHANICAL, ELECTRICAL, SECURITY ELECTRONICS AND PLUMBING PLANS FOR PIPE OR CONDUITS LOCATIONS, ELEVATIONS AND SIZE.
2. THIS DETAIL SHALL BE APPLICABLE FOR ALL PIPES PASSING THROUGH FOUNDATION WALLS, FOOTINGS OR WITHIN 2 FOOT OF THE BOTTOM OF THE FOOTING.
3. SIMILAR AT INTERSECTION OF FOUNDATION WALL.

17 INTERSECTION OF UNDERGROUND PIPING WITH FOUNDATION
SCALE: NTS

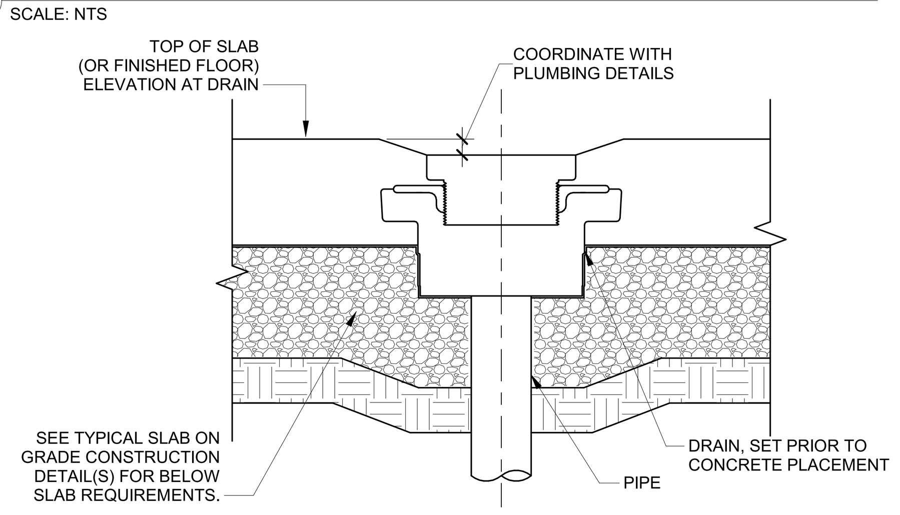

16 TYPICAL FLOOR DRAIN DETAIL
SCALE: NTS

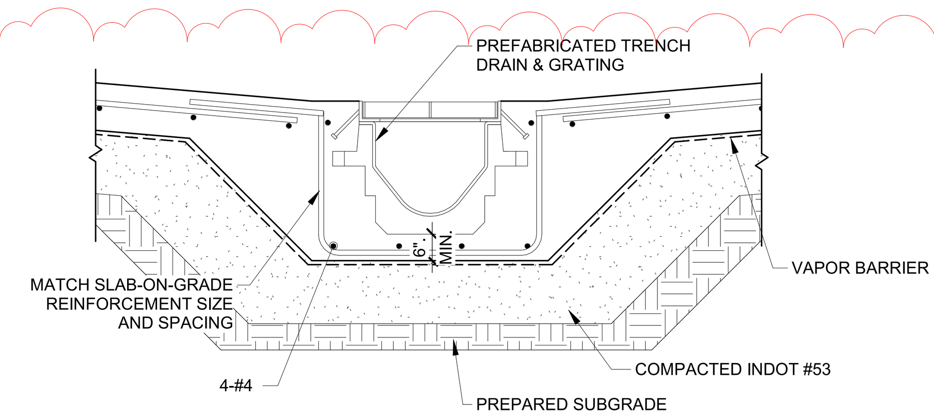

15 TYPICAL TRENCH DRAIN SECTION
SCALE: NTS

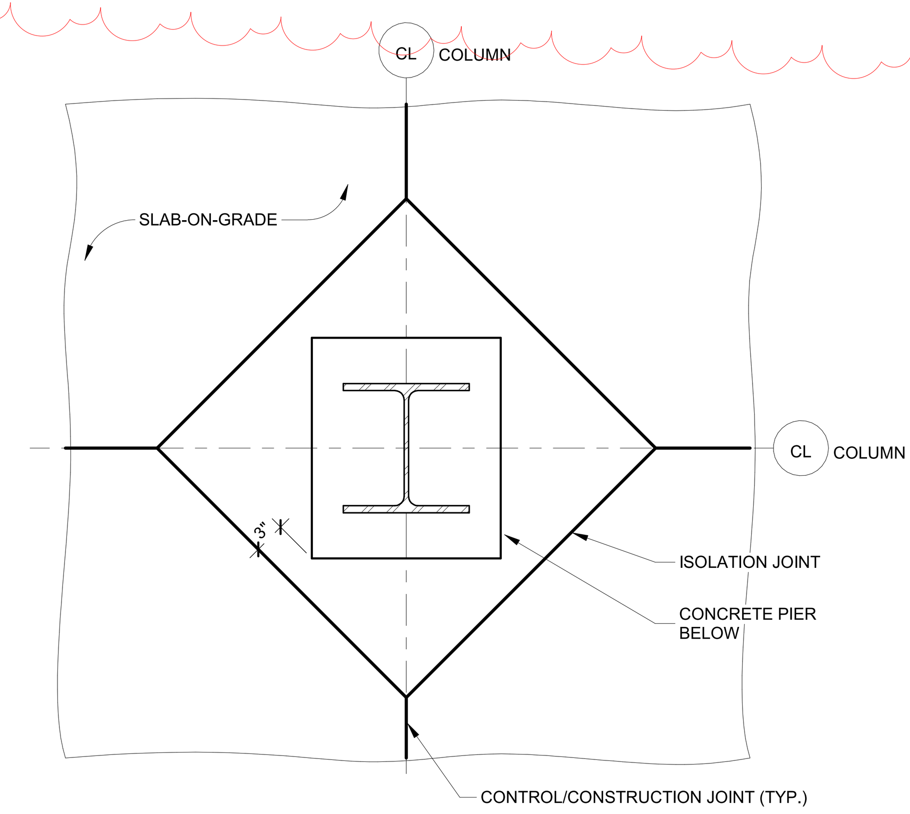

14 TYPICAL STEEL COLUMN ISOLATION JOINT
SCALE: NTS

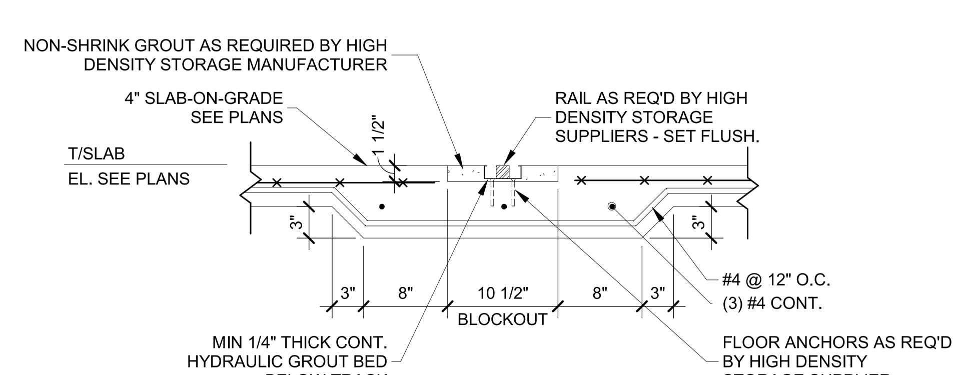

NOTES:
1. VERIFY LOCATION AND ACTUAL SIZE OF BLOCKOUT REQUIRED WITH HIGH DENSITY MOBILE STORAGE SUPPLIER.
2. CONCRETE BLOCKOUT BASE SURFACE SHALL BE LEVEL AS REQUIRED BY HIGH DENSITY STORAGE SUPPLIER.
3. THIS DETAIL IS FOR AN ALTERNATE BID ITEM. SEE PLANS.

13 TYPICAL HIGH DENSITY STORAGE RECESSED TRACK DETAIL
SCALE: NTS

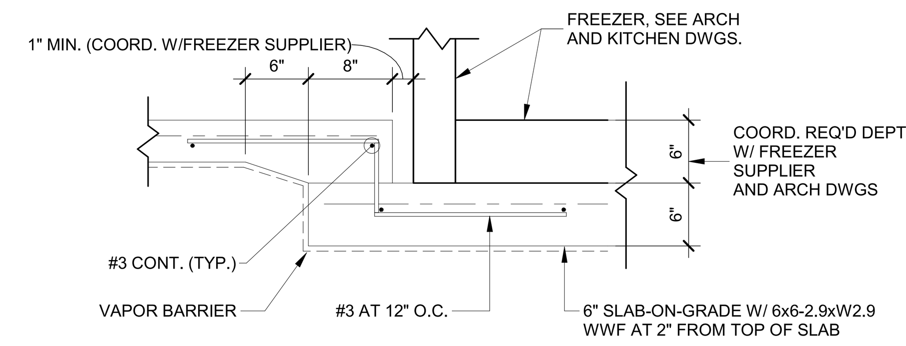

12 TYPICAL SECTION AT FREEZER
SCALE: NTS

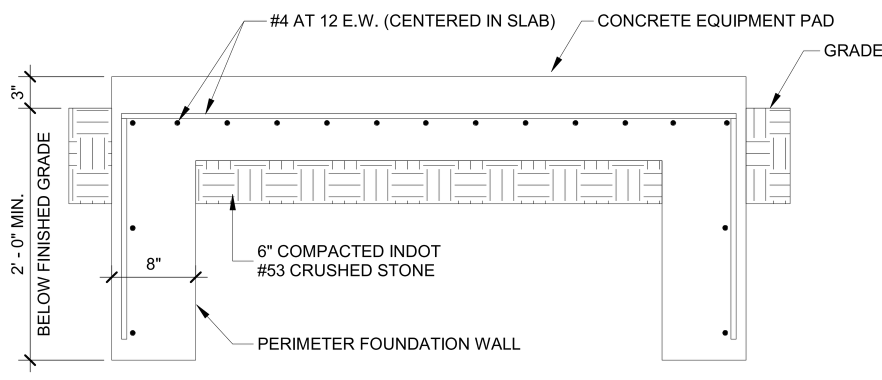

NOTES:
1. COORDINATE LOCATION, SIZE AND ANCHORAGE OF EQUIPMENT PAD WITH EQUIPMENT MANUFACTURER, MECHANICAL AND ELECTRICAL PLANS.
2. PAD SHALL BE A MINIMUM OF 1'-0" LARGER THAN EQUIPMENT ON ALL SIDES AND NO LESS THAN REQUIRED BY EQUIPMENT MANUFACTURER.

11 TYPICAL EXTERIOR EQUIPMENT PAD DETAIL
SCALE: NTS

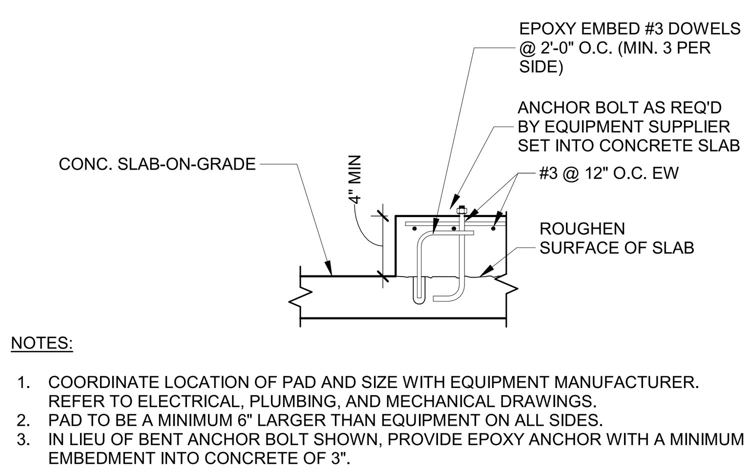

NOTES:
1. COORDINATE LOCATION OF PAD AND SIZE WITH EQUIPMENT MANUFACTURER. REFER TO ELECTRICAL, PLUMBING, AND MECHANICAL DRAWINGS.
2. PAD TO BE A MINIMUM 6" LARGER THAN EQUIPMENT ON ALL SIDES.
3. IN LIEU OF BENT ANCHOR BOLT SHOWN, PROVIDE EPOXY ANCHOR WITH A MINIMUM EMBEDMENT INTO CONCRETE OF 3".

10 TYPICAL INTERIOR CONCRETE EQUIPMENT PAD REINFORCING DETAIL
SCALE: NTS

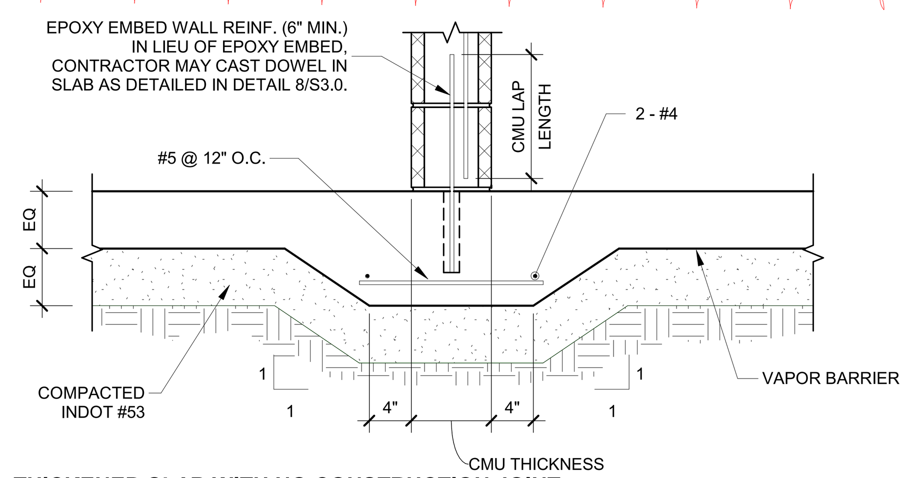

9 THICKENED SLAB WITH NO CONSTRUCTION JOINT DETAIL
SCALE: NTS

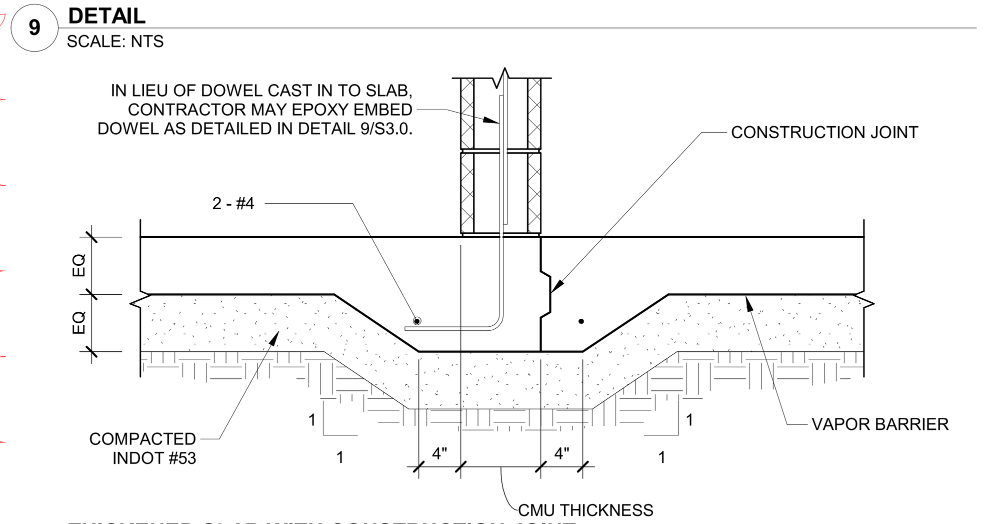

8 THICKENED SLAB WITH CONSTRUCTION JOINT DETAIL
SCALE: NTS

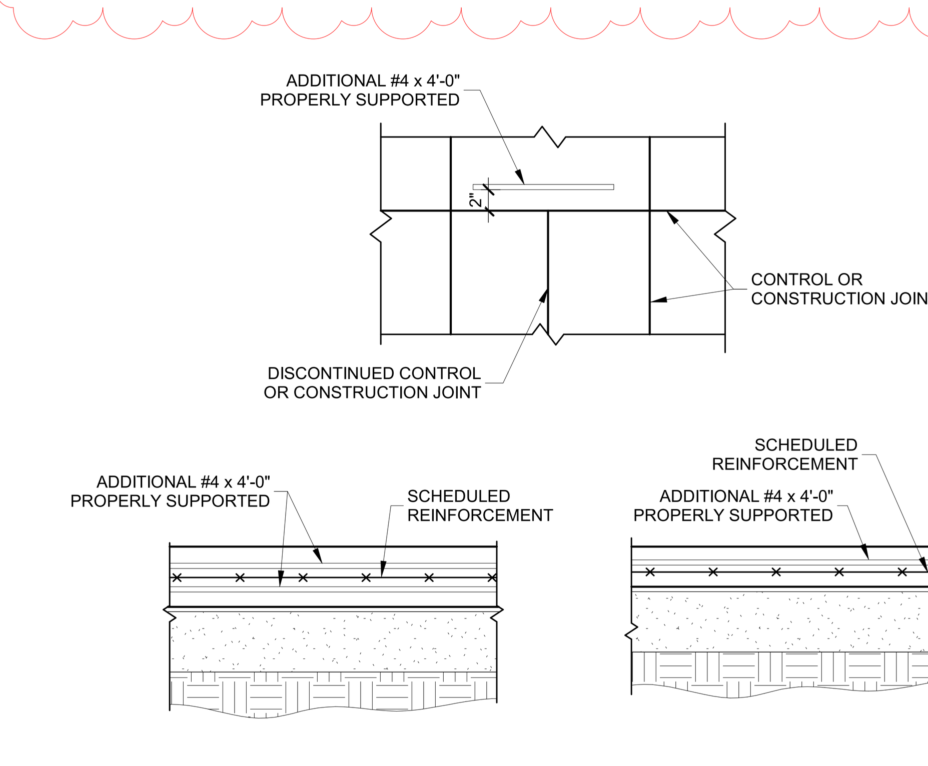

7 TYPICAL REINFORCEMENT AT DISCONTINUOUS JOINT
SCALE: NTS

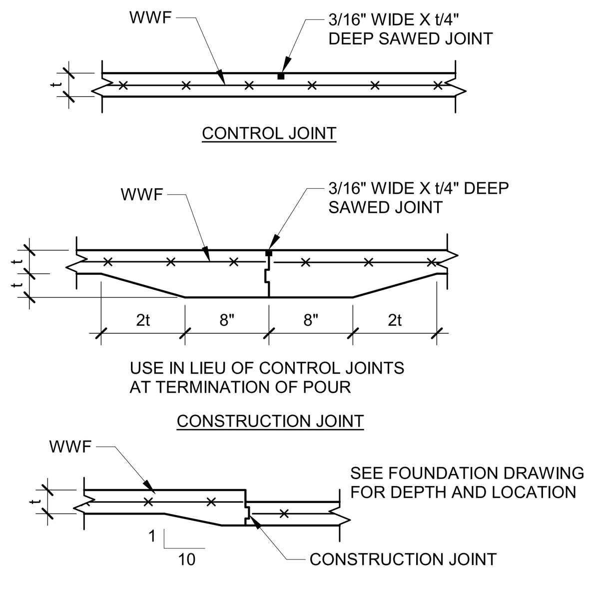

6 SLAB CONTROL/CONSTRUCTION JOINT
SCALE: NTS

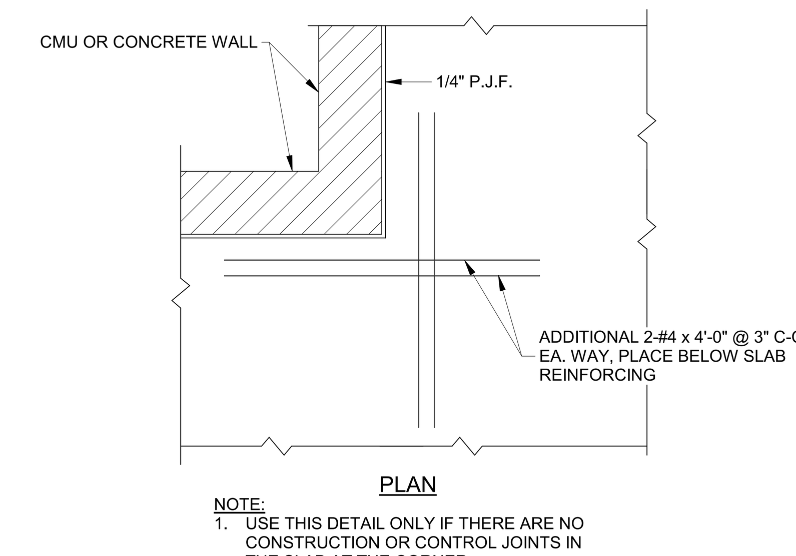

NOTE:
1. USE THIS DETAIL ONLY IF THERE ARE NO CONSTRUCTION OR CONTROL JOINTS IN THE SLAB AT THE CORNER

5 SLAB-ON-GRADE REENTRANT CORNER REINFORCING
SCALE: NTS

A3

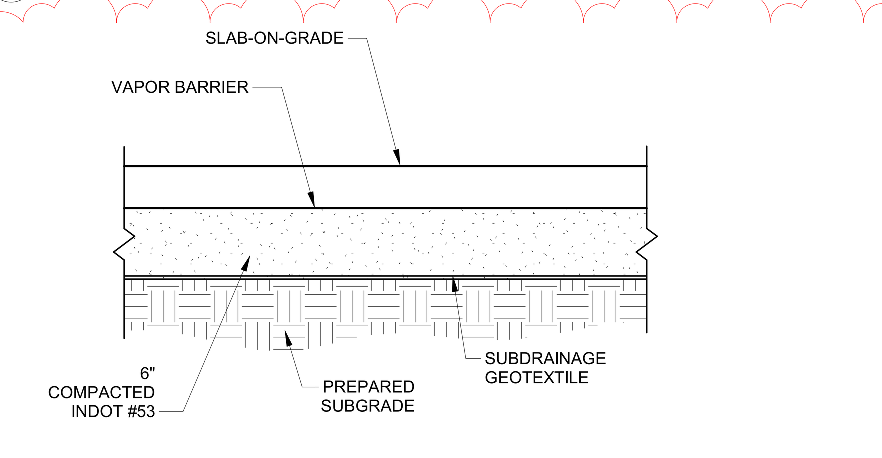

NOTE:
ALL CONDUIT, RACEWAY AND PIPING SHALL BE LOCATED BELOW THE COMPACTED INDOT #53.

4 TYPICAL SLAB-ON-GRADE DETAIL
SCALE: NTS

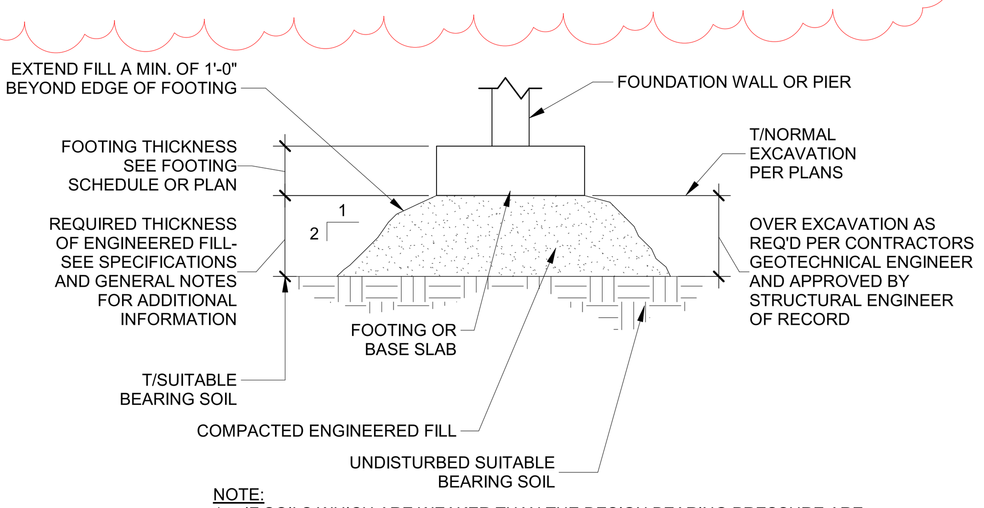

NOTE:
1. IF SOILS WHICH ARE WEAKER THAN THE DESIGN BEARING PRESSURE ARE ENCOUNTERED AT THE FOOTING ELEVATIONS INDICATED, UNDERCUTTING AND REPLACEMENT WITH BACKFILL WILL BE REQUIRED.

3 OVEREXCAVATION DETAIL
SCALE: NTS

	4000 PSI CONCRETE			
	LAP LENGTH		DEVELOPMENT LENGTH	
BAR SIZE	TOP	OTHER	TOP	OTHER
#3	24"	19"	19"	15"
#4	32"	25"	25"	19"
#5	40"	31"	31"	24"
#6	48"	37"	37"	29"
#7	70"	54"	54"	42"
#8	80"	62"	62"	48"
#9	91"	70"	70"	54"

2 CONCRETE REINFORCING LAP & DEVELOPMENT LENGTH REQUIREMENTS
SCALE: NTS

CONCRETE COVER REQUIREMENTS	
CONCRETE CAST AGAINST AND PERMANENTLY EXPOSED TO EARTH	3"
CONCRETE EXPOSED TO EARTH, OR WEATHER	2"
CONCRETE NOT EXPOSED TO WEATHER OR IN CONTACT WITH GROUND:	
SLABS, WALLS, JOISTS BEAMS & COLUMNS	1" 1 1/2"

1 CONCRETE COVER REQUIREMENTS
SCALE: N.T.S.

DLZ
ARCHITECTURE • ENGINEERING • PLANNING
SURVEYING • CONSTRUCTION SERVICES
DLZ INDIANA, LLC

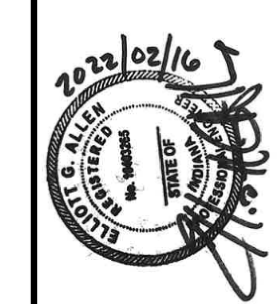

NO.	REVISION	DATE
A3	ADDENDUM 3	02/16/22

DRAWN: KJJ CHK'D: EGA
DESIGNED: KJJ
APPRV'D: EGA
DATE: DECEMBER 20, 2021
PROJECT NUMBER
2063-1048-90

SULLIVAN COUNTY SHERIFF'S OFFICE AND CORRECTIONAL FACILITY
2357 NORTH SECTION STREET SULLIVAN, INDIANA 47882

TYPICAL FOUNDATION DETAILS & SECTIONS

DRAWING NUMBER
S3.0
STRUCTURAL

C:\RevitBackups\2020\2063-1048-90 Sullivan County Jail - Struct_kjackowskiH3YGV.rvt
2/16/2022 10:27:12 AM