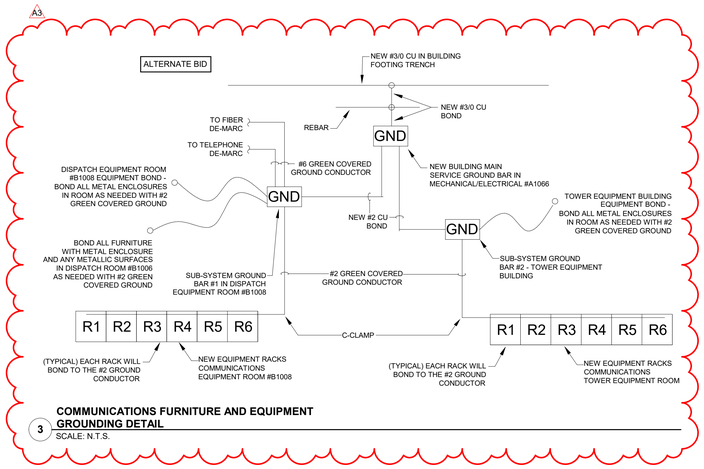


**3 COMMUNICATIONS FURNITURE AND EQUIPMENT GROUNDING DETAIL**
SCALE: N.T.S.

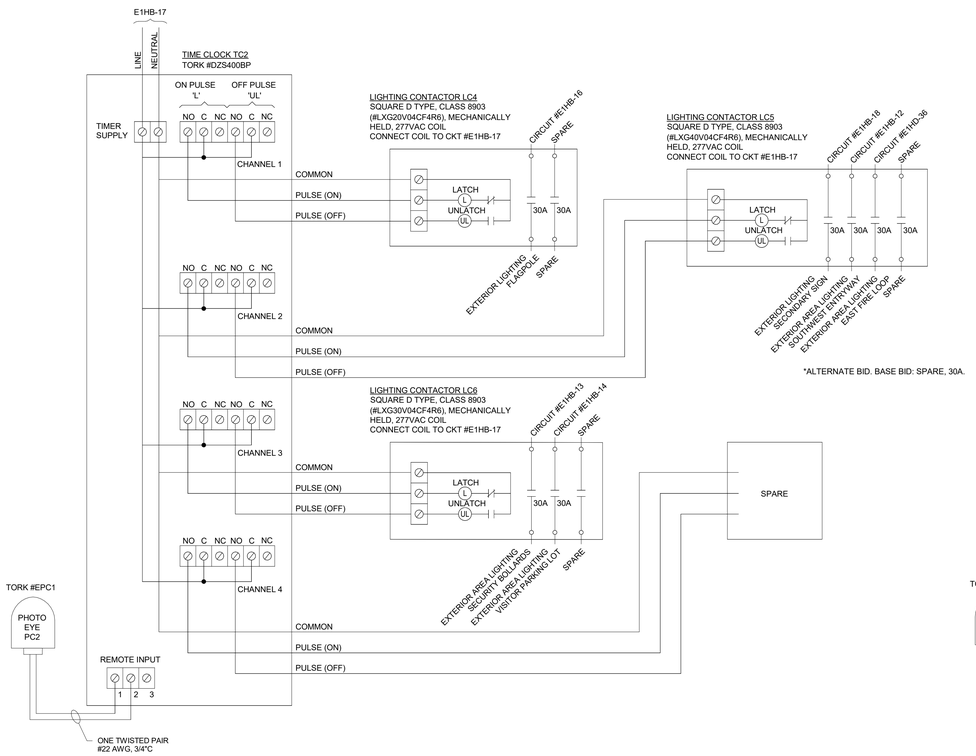


**2 EXTERIOR LIGHTING WIRING DIAGRAM TC2**
SCALE: N.T.S.

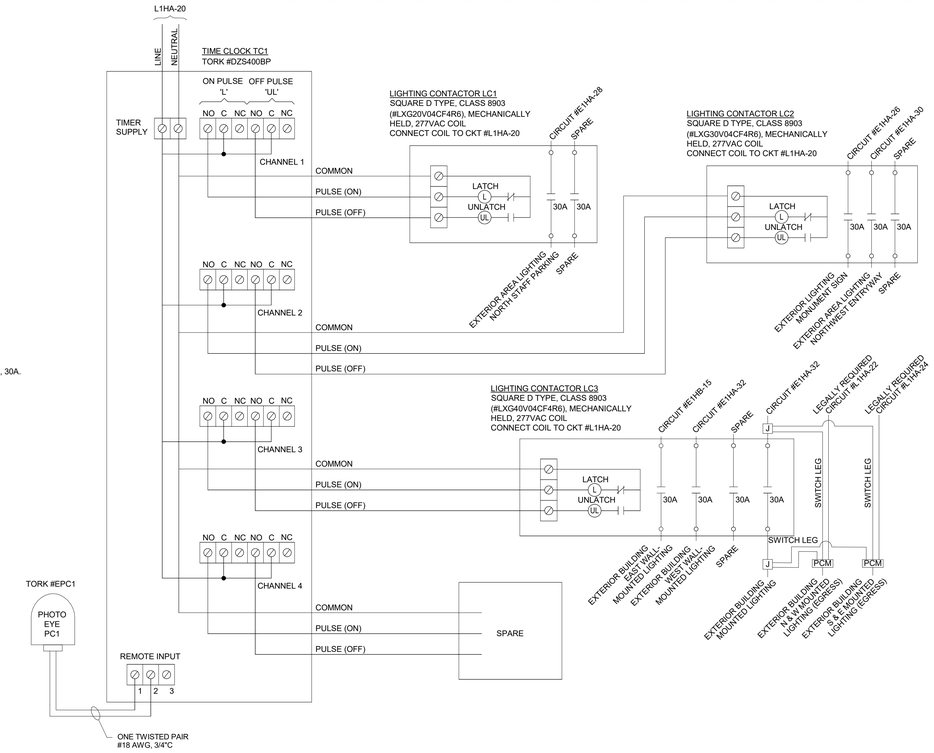


**1 EXTERIOR LIGHTING WIRING DIAGRAM TC1**
SCALE: N.T.S.

DLZ
ARCHITECTURE • ENGINEERING • PLANNING
SURVEYING • CONSTRUCTION SERVICES
DLZ INDIANA, LLC

02-16-2022
THOMAS K. FOUGHT
REGISTERED
No. (PE13700119)
STATE OF INDIANA
PROFESSIONAL ENGINEER

| NO. | REVISION | DATE |
|---|---|---|
| A1 | ADDENDUM 1 | 01/20/22 |
| A3 | ADDENDUM 3 | 02/16/22 |

DRAWN: RDW CHK'D: TKF
DESIGNED: RDW
APPROVE: TKF
DATE: DECEMBER 20, 2021

PROJECT NUMBER
2063-1048-90

SULLIVAN COUNTY SHERIFF'S OFFICE AND CORRECTIONAL FACILITY
2357 NORTH SECTION STREET SULLIVAN, INDIANA 47882

ELECTRICAL DETAILS

DRAWING NUMBER
E8.7

ELECTRICAL

C:\Revit\Backups\2020\2063-1048-90 Sullivan County Jail - Elect_rwilley-DLZ.rvt
2/16/2022 4:07:14 PM